State :	South Carolina	Wind Velocity (mph) :	100
Federal Proj :	Carolina Crossroads Phase 1 & 2	Ice Load Area :	Yes
State Proj :	P039718		
County :	Lexington & Richland		
Route :	I-26 & I-126		

Reference:

6th Edition of Standard Specifications for Structural Supports for Highway Signs, Luminaires and Traffic Signals, as published by the American Association of State Highway and Transportation Officials, dated 2013. (Includes all Interims)

SCDOT
South Carolina Department of Transportation
ACCEPTED
[X] AS NOTED
REVIEWED BY: John Egan 1/26/24
DATE

Index:

F1C			Cover sheet
F2C			Material Specifications & Foundation Design Assumptions
F3C	-	F7C	Truss Design format
F8C			Post Design format
F9C	-	F10C	Anchor Bolt and Base Plate Design format
F11C	-	F12C	Truss Connection to Post Design format
F13C	-	F14C	Deflection and Camber format
F15C	-	F16C	Member Selection format
F17C			Truss Splice Design format (if required)
F18C			Vibration and Fatigue Design format
F19C	-	F28C	Foundation Design (Spread and Cylindrical)

INFRASTRUCTURE CONSULTING & ENGINEERING
SHOP DRAWING REVIEW
REVIEW IS FOR GENERAL COMPLIANCE WITH CONTRACT DOCUMENTS. NO RESPONSIBILITY IS ASSUMED FOR CORRECTNESS OF DIMENSIONS OR DETAILS.

APPROVED	☐
APPROVED AS NOTED	☒
REVISE AND RESUBMIT	☐
REJECTED	☐

BY: EJL DATE: 11/3/23

These design format sheets prefixed with "F" are furnished to illustrate basic formulas used by our design program. Work these format sheets with Box Truss Cantilever Design information sheet(s) prefixed with "C" followed by design computation printouts. Step by step calculations are not supplied nor required. Results of the calculations presented are those produced from standard steel design calculations or the results of issues in fabrication. The approver may verify these results using any method they deem suitable, resulting increase in material requirements will be considered but may increase cost to the owner if deemed excessive. Walpar Engineers have attested that these designs and drawings meet the required specifications for the project stated above by sealing and signing the documents.

SOUTH CAROLINA LICENSED PROFESSIONAL ENGINEER
David A Lallone
No. 38665
DAVID A LALLONE

Sep 8 2023

Material Specifications: (See General Notes drawing for complete list & for items not shown)

Hardware ---------- Primary		ASTM F3125 Gr A325
	Secondary	ASTM A307
Wide Flange Sections ----------		ASTM A992 (50 ksi)
Plates ----------		ASTM A709 Gr 50 (50 ksi)
Angles ----------		ASTM A36
Anchor Bolts ----------		ASTM F1554, Gr 55, S1
Anchor Nuts ----------		ASTM A563, Gr DH or A194 Gr 2H
Galvanizing ---------- Hardware		ASTM A153
	Structural	ASTM A123
Welding ----------		AWS Specifications D1.1, Latest Revision
Chords ----------Steel Pipe		ASTM A500 Gr B and/or C, ASTM A252 Gr 1, 2, or 3, ASTM A53 Gr A and/or B, and API 5L X42 through X80 (52 ksi Min. Yield and not to exceed 82 ksi)
Posts ----------Steel Pipe		
Struts & Diagonals ----------Steel Pipe		

Foundation Design Assumptions:

1. See printouts for maximum soil bearing capacity and passive pressure.
2. Wind gust factors are included in loadings.
3. Allowables increased by 33% for Group II loadings.
4. Concrete f 'c = 3000 psi
5. Reinforcing steel to be ASTM – A706, Grade 60, Fy = 60 KSI.
6. Design cylindrical footings as piles with lateral loads. Overturning moments and lateral soil forces are critical. Therefore, use plastic hinge approach for soil resistance and maximum moment in piles (Rutledge, Seiler, Broms method).



Sep 8 2023

Wind Load

$P = 0.00256\ (K_z)(G)(V^2)(I_r)(C_d)$ Eq. 3.8.3-1, page 3-5 (P min = 25 psf, for Group III only)

Alternate Method for Wind Pressure (Appendix C) (If required)

* $P = 0.00256\ (1.3*V)^2\ (C_d)\ (C_h)$ Eq (C.3-1 psf), page C-1)

Where
V = Wind Velocity (MPH)
C_d = Wind Drag Coefficient from Table 3.8.6-1, pg's 3-17, 3-18, 3-19
K_z = Coefficient of Height from Table 3.8.4-1, pg 3-13
C_h = Coefficient of Height from Table C.3-1, pg C-2
G = Gust Effect Factor (minimum of 1.14)
I_r = Wind Importance Factor = 1.00 for 50 year interval

Wind on Sign and Walkway (if req'd) (C_d = see Table 3.8.6-1)

$W_p = (D)(B_2)(P_s)P_s$ = wind on sign in PSF
D = Sign Height (ft)
B_2 = Sign Length (ft)

$W_w = (0.75)(WL)(P_s)$ (use 9" depth for walkway)
WL = Walkway Length (ft)

Wind on Truss or Arm (C_d = see Table 3-6)

$W_h = (A_t)(B_1)(P_t)P_t$ = Wind on Truss in PSF

A_t = Exposed area of truss/arm per foot
$A_t = \frac{2(\text{Chord OD}) + (\text{Total Projected Area of Web Members}) / (\text{Length of Truss})}{12}$
B_1 = Exposed truss/arm length (ft)

Moment due to wind (Each Chord, Top and Bottom)

$M_h = \frac{(W_p)(A_2)+(W_h)(A_1)}{2}$

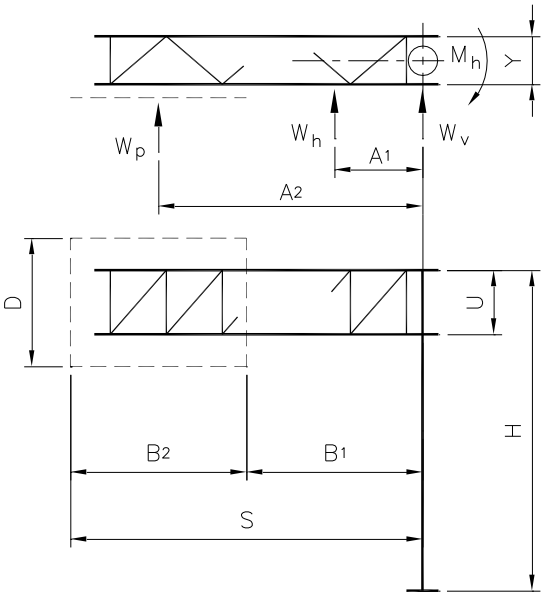

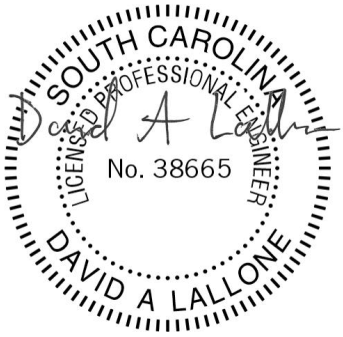

Sep 8 2023

Dead Load

Kv_i = 0 when Horizontal Struts are not used
Kv_i = 1 when Horizontal Struts are used
Hw = Estimated weight of signs and hangers = 7 psf, unless otherwise specified, see printouts
Ww = Estimated weight of walkway, if required, is calculated based on width of walkway and any specified railing, lights and safety angle and is calculated by the program based on spacing of supports. See printouts for estimated weight

W_d = Weight per foot of Truss

$$= 4(\text{Chord Wgt}) + 2(\text{Vert Wgt}) + 2(1.414)(\text{Vert Diag Wgt}) + 3(\text{Horiz Strut Wgt})\frac{Y}{S} + 2(\text{Horiz Strut Wgt})\frac{Y}{U}(Kv_i)$$

$$+ 2(\text{Horiz Diag Wgt})\frac{\sqrt{U^2+Y^2}}{U} + 3(\text{Int Diag Wgt})\frac{\sqrt{U^2+Y^2}}{S}$$

DL_t = Weight of Truss
= $(W_d)(S)$

DL_s = Weight of signs, hangers and walkway
= (Hw) (D) (B_2) + (Ww) (B_2) (Kw_i)

Kw_i = 0 where walkway not required
Kw_i = 1 where walkway required

Chord load due to dead load (each chord)

$$Pcd = \frac{(DL_t)(\frac{1}{2}S) + (DL_s)(A_2)}{2U}$$

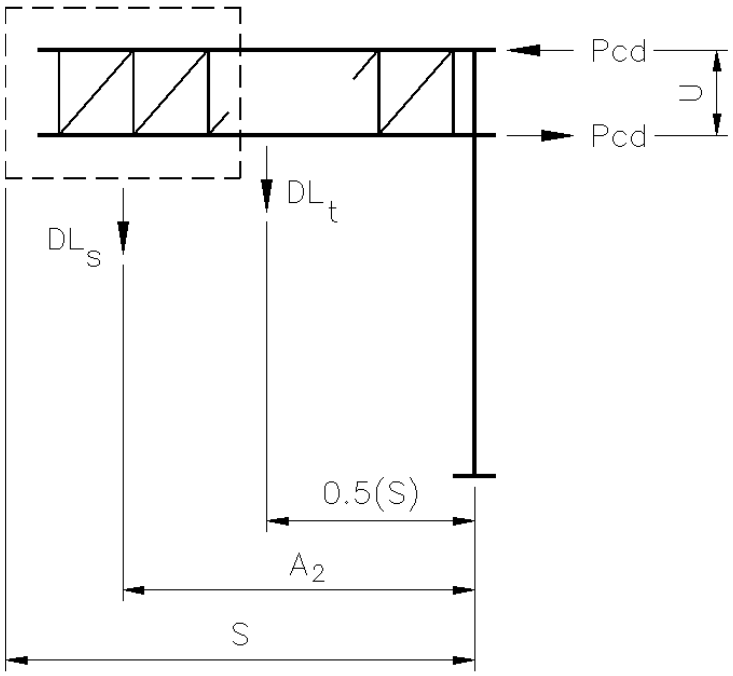

SOUTH CAROLINA LICENSED PROFESSIONAL ENGINEER
No. 38665
DAVID A LALLONE

Sep 8 2023

Ice Load

3 PSF applied to one face of sign and around surface of structural members. (See Fig.3.7-1, pg 3-4 for areas)

Wi = Ice load per foot of truss

$$= \frac{3}{12}\left[\begin{array}{l} 4\pi(\text{Chord OD}) + 2\pi(\text{Vert Strut OD}) + 2\pi(1.414)(\text{Vert Diag OD}) + 3\pi(\text{Horiz Strut OD})\frac{Y}{S} + 2\pi(\text{Horiz Diag OD})\frac{\sqrt{U^2+Y^2}}{U} \\ + 3\pi(\text{Int Diag OD})\frac{\sqrt{U^2+Y^2}}{S} \end{array}\right]$$

IL_t = Weight of ice on truss
= $(W_i)(S)$

IL_s = Weight of ice on signs and walkway
= $(3)(D)(B_2) + (21)(B_2)(Kw_i)$

Assume ice on walkway = 21 lbs per lineal foot
Kw_i = 0 where walkway not required
Kw_i = 1 where walkway required

Chord load due to ice load (each chord)

$$Pci = \frac{(ILt)\left(\frac{1}{2}S\right) + (ILs)(A_2)}{2U}$$

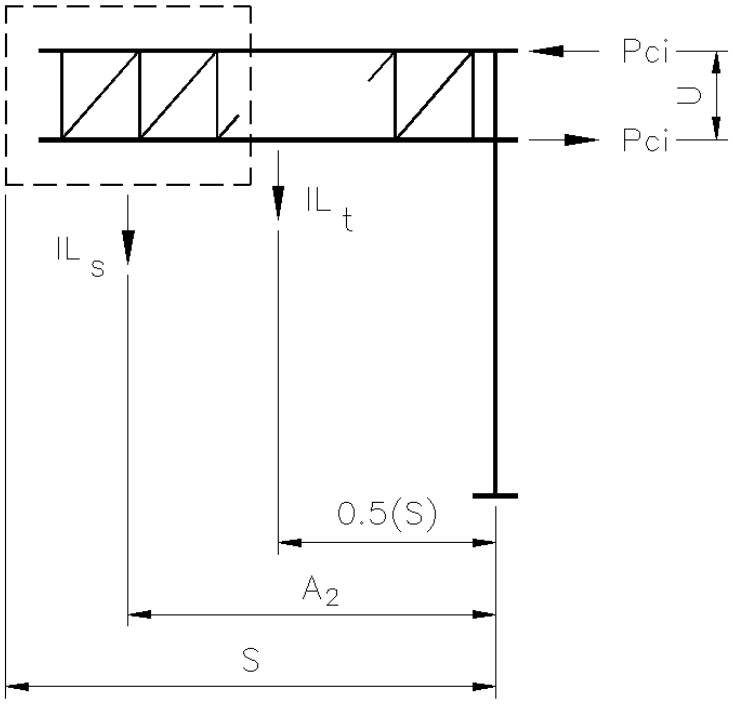

SOUTH CAROLINA
LICENSED PROFESSIONAL ENGINEER
No. 38665
DAVID A LALLONE

Sep 8 2023

Group I (DL)

Chord Load (If $Kv_i = 0$, L = 2* U; if $Kv_i = 1$, L = U)

$Pc_I = Pcd$

Diagonals (vertical) L = 1.414 * U

$$Pdv_I = \frac{(DL_t + DL_s)(1.414)}{2}$$

Struts (vertical) L = U

$$Psv_I = \frac{DL_t + DL_s}{2}$$

Group II (DL + W)

Chord Load (If $Kv_i = 0$, L = 2 * U; if $Kv_i = 1$, L = U)

$$Pc_{II} = Pcd + \frac{M_h}{Y}$$

Diagonals (vertical) L = 1.414 * U

$Pdv_{II} = Pdv_I$

Struts (vertical) L = U

$Psv_{II} = Psv_I$

Diagonals (horizontal) $L = \sqrt{U^2 + Y^2}$

$$Pdh_{II} = \frac{(W_p + W_h)\,(U^2+Y^2)^{1/2}}{2Y}$$

Struts (horizontal) L = Y

$$Psh_{II} = \frac{W_p + W_h}{2}$$

Group III (DL + W/2 + IL)

Chord Load (If $Kv_i = 0$, L = 2 * U; if $Kv_i = 1$, L = U)

$$Pc_{III} = Pcd + Pci + \frac{M_h}{2Y}$$

Diagonals (vertical) L = 1.414 * U

$$Pdv_{III} = Pdv_I + \frac{(IL_t + IL_s)(1.414)}{2}$$

Struts (vertical) L = U

$$Psv_{III} = Psv_I + \frac{(IL_t + IL_s)}{2}$$

SOUTH CAROLINA
LICENSED PROFESSIONAL ENGINEER
No. 38665
DAVID A LALLONE

Sep 8 2023

Group III (DL + W/2 + IL)

Diagonals (horizontal) $L = \sqrt{U^2 + Y^2}$

$Pdh_{III} = \frac{Pdh_{II}}{2}$

Struts (horizontal) $L = Y$

$Psh_{III} = \frac{Psh_{II}}{2}$

Note:

Interior diagonals are based on chord to diagonal with a 4:1 ratio.

Determine:

Chords	- using Pc_I, Pc_{II}, Mc_{II}, Pc_{III}, Mc_{III}
Vertical diagonals	- using Pdv_I, Pdv_{II}, Pdv_{III}
Horizontal diagonals	- using Pdh_{II}, Pdh_{III}
Vertical struts	- using Psv_I, Psv_{II}, Psv_{III}
Horizontal struts	- using Psh_{II}, Psh_{II}

SOUTH CAROLINA
LICENSED PROFESSIONAL ENGINEER
No. 38665
DAVID A LALLONE

Sep 8 2023

Post Design **(**Group I not critical, check Group II & III for maximum conditions)

On cantilever structures, load combination 1, AASHTO Article 3.9.3, will always be critical since the resultant moment will be greater.

Group II - Combination 1 (DL+W)

W_v = Wind on Post

$= (\frac{\text{Post OD}}{12})(H)(0.00256)(G)(V)^2(C_d)(K_z)(I_r)$ Reference Sheet F3C

DL_p = Weight of Post

= (H)(Post Wgt) + Base PL + Conn PL

Mnc_{II} = Moment (normal component)

$= (W_p + W_h)(H - \frac{U}{2}) + (W_v)(\frac{H}{2})$

Mtc_{II} = Moment (transverse component)

$= (0.2)(Mnc_{II}) + (DL_s)(A_2) + (DL_t)(½S)$

Mr_{II} = Resultant Moment = $\sqrt{Mnc_{II}^2 + Mtc_{II}^2}$

T_{II} = Torsion = 2 M_h

P_{II} = Total Dead Load = $DL_s + DL_t + DL_p$

V_{II} = Shear = $W_p + W_h + W_v$

Group III - Combination 1 (DL+W/2+IL)

Mnc_{III} = Moment (normal component) = ½ Mnc_{II}

Mtc_{III} = Moment (transverse component)

$= (0.2)(Mnc_{III}) + (DL_s+IL_s)(A_2) + (DL_t+IL_t)(½S)$

Mr_{III} = Resultant Moment = $\sqrt{Mnc_{III}^2 + Mtc_{III}^2}$

T_{III} = Torsion = ½ T_{II}

P_{III} = Total Dead Load = $P_{II} + IL_t + IL_s + 3\pi(H)(\frac{\text{Post OD}}{12})$

V_{III} = Shear = ½ V_{II}

Determine: Post - using Mr, T, P, & V for each group as applicable

SOUTH CAROLINA
LICENSED PROFESSIONAL ENGINEER
David A Lallone
No. 38665
DAVID A LALLONE

Sep 8 2023

Anchor Bolt Design

Use loadings from Group II, (Maximum by inspection). See sheet F2C for material specifications.

Total shear per anchor bolt

Worst case if normal and transverse shear loads are superimposed with rotational shear load

$$V_{AB} = \sqrt{(Vnc + Vr)^2 + (Vtc + 0.2Vr)^2}$$

Where $Vnc = \frac{\text{Normal Shear}}{\text{No of Bolts}}$

$Vtc = 0.2 * (Vnc)$

$Vr = \frac{\text{Torque}}{(\text{No Bolts})(\text{Bolt Circle Dia})} \times \text{Cos}(\alpha)$ (α = angle Vr from Vnc)

Maximum axial load in anchor bolts

$P_{AB} = \frac{M(c)}{I_g} - \frac{\text{Dead Load}}{\text{No of Bolts}}$ where I_g = Inertia of bolt group

M = Mr_{II} or Mr_{III} , whichever is greater

Allowable Stresses

$F_v = 0.30\ F_y(j)$ (Eq 5.17.4.2-3) $F_t = 0.50\ F_y(j)$ (Eq 5.17.4.2-1)

Determine anchor thread diameter

$A_t = \frac{P_{AB}}{F_t}$ A_t = Actual tensile stress area required per bolt

A_{tt} = Tensile stress area for trial size bolt ($A_{tt} > A_t$)

Check for combined loading

$(f_v)^2 + (kf_t)^2 \le (F_v)^2$ $k = \frac{F_v}{F_t}$ $fv = \frac{V_{AB}}{A_{tt}}$ $ft = \frac{P_{AB}}{A_{tt}}$

Anchor bolt embedment length

Embedment length to be the greater of the development length for a non-contact lap splice if the anchor bolt is within 6" of the vertical reinforcement of the pedestal / cylinder or 20 anchor bolt diameters. Alternately the anchor bolt embedment will meet or exceed the requirements of Appendix D of ACI-318-08. All anchors bolts will have a nut at the bottom and be 55 ksi bolts unless otherwise specified. Note hooked anchor bolts only used if specified or required by job specifications.

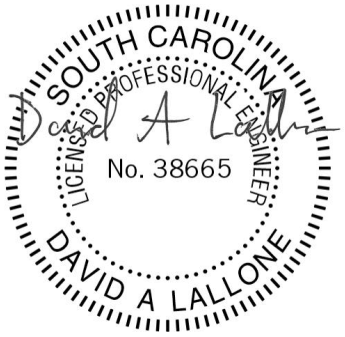

Sep 8 2023

Base Plate Design

Below is the standard base plate design that will be used unless otherwise specified or indicated on design printouts and/or drawings.

Use ASTM A709 Grade 50 Plate (F_y = 50,000 PSI)

Assume point of contraflexure midway between bolt and toe of weld.

$$e = \frac{BC - \text{Post Dia.} - 2 * 0.313}{4}$$

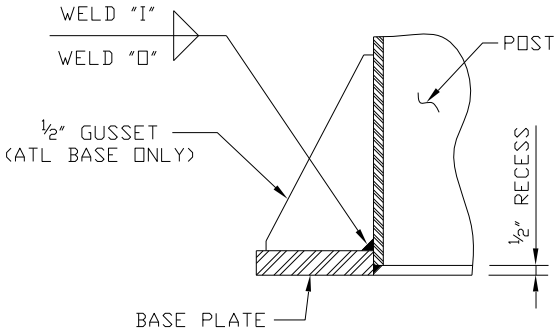

TYPICAL SECTION THRU BASE

Allowable Stresses

Plate: Fb = 0.75 F_y (j) (Eq 5.8-1)

Weld: Fv = 21.00 (j) AWS-2008 Table 2.3 page 25 - Ft_w = 70 ksi

Determine Plate Thickness

$M = (P_{AB})\ (e)$ $\quad b = \frac{\pi(\text{Bolt Circle})}{\text{No of Bolts}}$

$$S = \frac{M}{b * F_b}$$

$t = \sqrt{6\,S}$ (Base Plate thickness the greater of (t) or anchor bolt diameter)

Determine Weld Size

Design for Torque (T_{II} or T_{III}) + Moment (Mr_{II} or Mr_{III}) + Dead Load (DL) + Horiz Shear (V_{II} or V_{III})

$$f_v = \frac{Mr_{II} \text{ or } Mr_{III}}{0.6366(0.5)\pi(\text{Pipe OD})^2} + \frac{DL}{\pi(\text{Pipe OD})} \qquad f_t = \frac{T_{II} \text{ or } T_{III}}{\pi(\text{Pipe OD})^2} \qquad f_h = \frac{V_{II} \text{ or } V_{III}}{\pi[\text{Pipe OD}]}$$

$$f_r = \sqrt{f_v^2 + f_h^2 + f_t^2}$$

Strength of weld I; $\quad I = (\text{Pipe Thk} - 0.0625)(0.707)(F_v)(j)$

Size of weld O; $O = \frac{(f_r - I)}{(0.707)(F_v)(j)}$ $\quad$ use $\frac{5}{16}$" Minimum Weld

Alternate Base Plate

If the required base plate exceeds 3" in thickness, the use of stiffeners extended beyond critical bending section will be used and the plate thickness re-sized, unless otherwise specified. Use weld on stiffeners in addition to weld I and weld O to develop base connection.

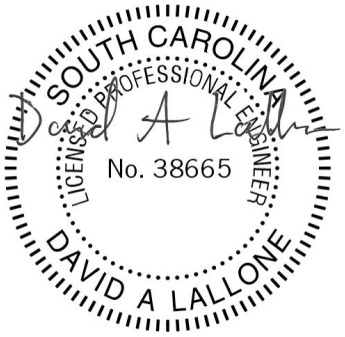

Sep 8 2023

Truss Connection to Post

Check Group II and Group III loadings and use maximum.
Use ½" plates for all stiffeners. OK by inspection.

Weld design

Plates "A" & "B" to post -

r = pipe radius in feet.
Weld Fv = 21000 psi (AWS-2008 Table 2.3 page 25 - Ft_w = 70000 psi minimum)
C = pipe circumference in inches

$$Prp_{II} = \frac{Mh}{r} + 2\,Pcd$$

$$Prp_{III} = \frac{Mh}{2r} + 2\,Pcd + 2\,Pci$$

Fillet weld size required for plate "A" (Weld one side)

$$\text{Fillet size} = \frac{Prp\,max}{(C)(0.707)(Fv)}$$ Use $\frac{1}{4}$" minimum fillet, unless otherwise specified, see printouts

Fillet weld size required for plate "B" (Weld one side)

$$\text{Fillet size} = \frac{Prp\,max}{2(C)(0.707)(Fv)}$$ Use $\frac{3}{16}$" minimum fillet, unless otherwise specified, see printouts

Plates "C" & "D" to chords -

Minimum length of plate "C" or "D" = Lp = Post OD + 6"

Pc max = Greater of Pc_{II} or Pc_{III}

$$\text{Fillet weld size required} = \frac{Pc\,max}{2(Lp)(0.707)(Fv)}$$ Use $\frac{3}{16}$" minimum fillet, unless otherwise specified, see printouts

Bolts at chords

Use $\frac{3}{4}$" ø ASTM A325-N bolts

A_1 = Bolt Area = 0.4418 sq. in.
Allowable shear stress for A325-N bolts = 19000 psi (AASHTO Table 10.32.3B)
Fv = (A_1) (19000) = 8394 lbs

Pb max = Greater of Pb_{II} or Pb_{III}

$$Pb_{II} = Pcd + \frac{Mh}{Y - 0.75} \qquad Pb_{III} = Pcd + Pci + \frac{Mh}{2\,(Y - 0.75)}$$

$$\text{Number of bolts required, } N = \frac{Pb\,max}{Fv}$$ Use 6 bolts minimum

SOUTH CAROLINA
LICENSED PROFESSIONAL ENGINEER
David A Lallone
No. 38665
DAVID A LALLONE

Sep 8 2023

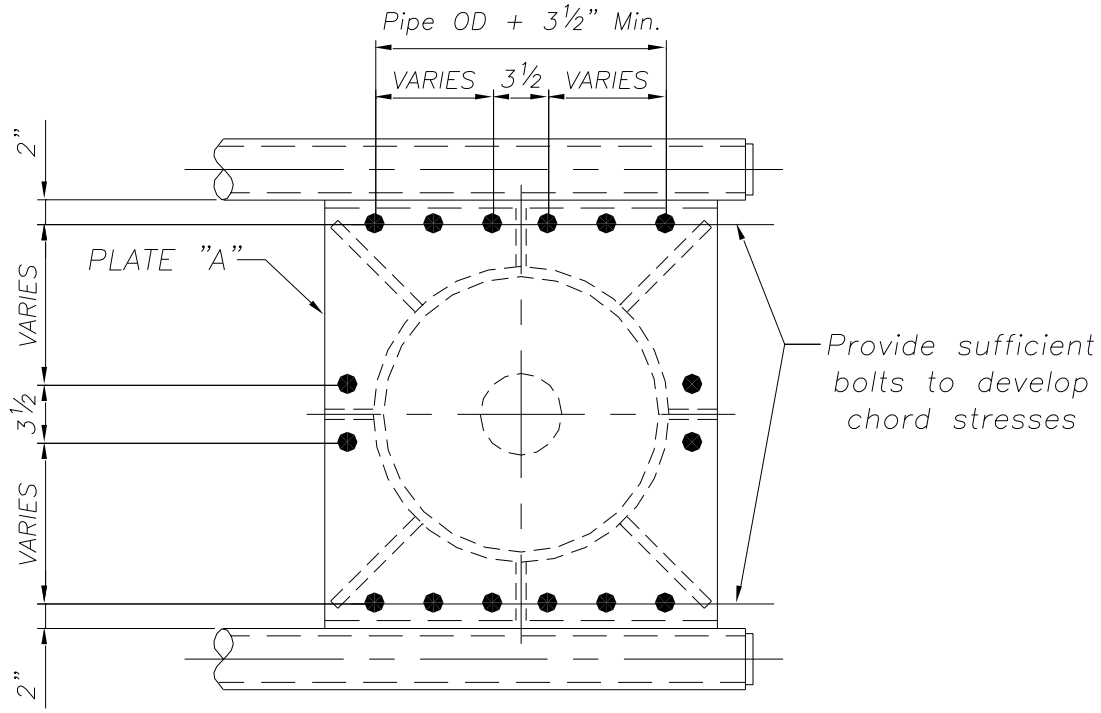

TOP CHORD

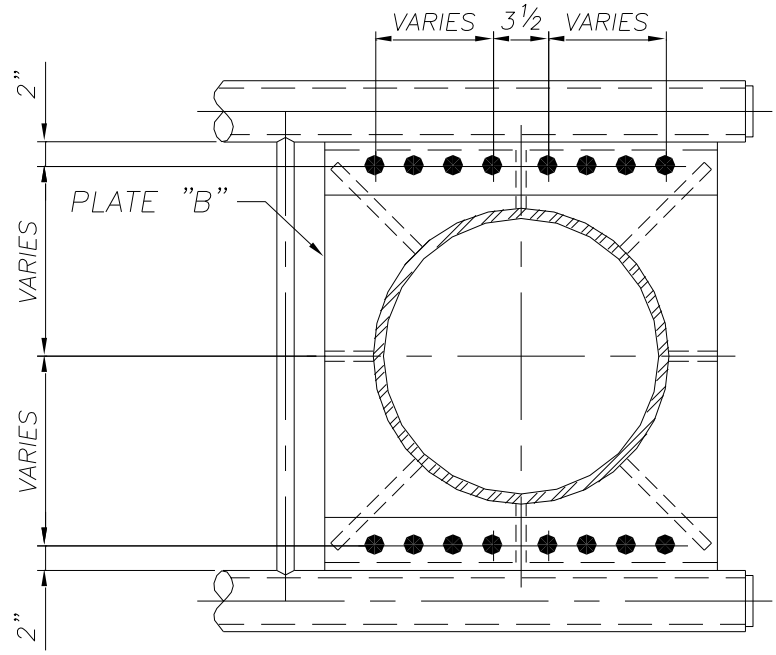

BTM CHORD



Sep 8 2023

Dead Load Deflection and Camber

Notes:

1. For dead load deflection and computed camber for cantilever structures, double the span length and apply loads symmetrically about centerline.
2. Tilt post away from roadway at erection by adjusting leveling nuts. Post to be vertical after deflection.
3. Permanent camber after deflection shall be at least 1", unless otherwise specified.

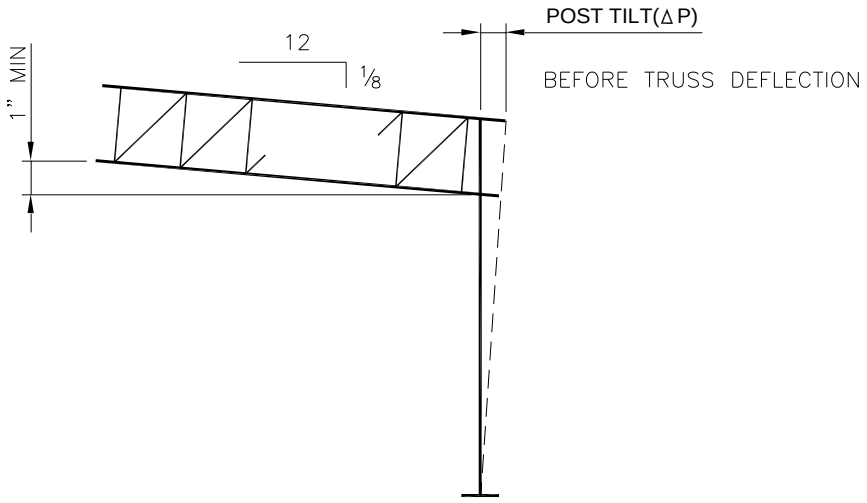

Nomenclature

S_1 = left span S_2 = right span
A = chord area
I_o = chord moment of inertia
U = truss depth
I = truss moment of inertia
C = camber
H = post height
M = moment at top of post

PDL = truss deflection due to post bending
E = modulus of elasticity
Wd_i = load at any point
A_i = distance to load point
ΔDL = truss dead load deflection
ΔP = post tilt
I_p = post moment of inertia

Truss deflection due to dead load

$$\Delta DL = \frac{1728\left[\sum_{i=1}^{M} WD_i\, A_i\,(3S^2 - 4A_i^{\,2}) + \sum_{i=M+1}^{M} WD_i\,(S - A_i)\{3S^2 - 4(S - A_i)^2\}\right]}{6EI}$$

SOUTH CAROLINA
LICENSED PROFESSIONAL ENGINEER
No. 38665
DAVID A LALLONE

Sep 8 2023

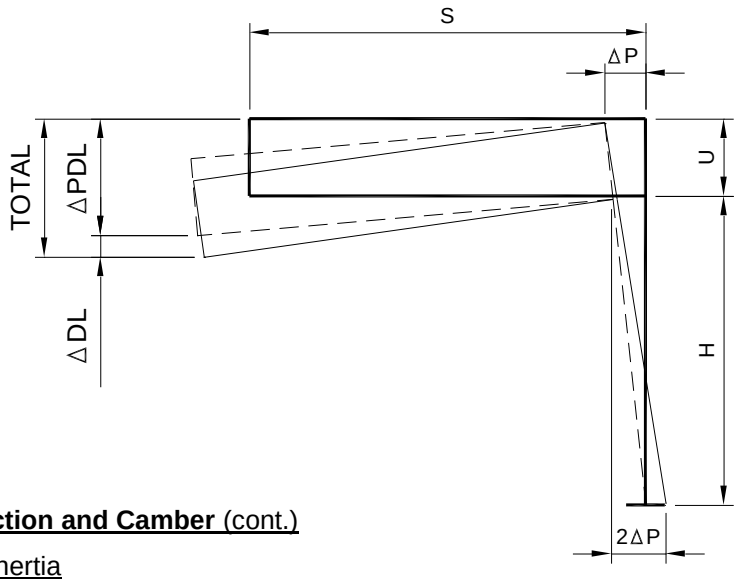

Dead Load Deflection and Camber (cont.)

Truss moment of inertia

$$I = 4(I_o) + 4(A)\left(\frac{U}{2}\right)^2$$

Post tilt

$$\Delta P = \frac{12(M)(H)^2}{2EI_p}$$

$$M = (DL_T)\ (\tfrac{1}{2}\ S) + (DL_S)(A_2) + (DL_W)(A_2)$$

Truss deflection due to post bending

$$\Delta PDL = \frac{2(\Delta P)(S)}{H}$$

Total dead load deflection

$$Total = \Delta DL + \Delta PDL$$

Camber Used

C_u = (S)(0.125 in/ft), unless otherwise noted on printouts and/or drawings

Permanent camber remaining

$C_p = C_u - \Delta DL$

SOUTH CAROLINA
LICENSED PROFESSIONAL ENGINEER
No. 38665
DAVID A LALLONE

Sep 8 2023

Member selection - Steel Pipe

Increase in allowable unit stresses from Table 3.4-1, page 3-3.

j = 1.33 for Group II and Group III
k = 1.0 for web members and truss chords, unless otherwise specified.
k = 2.1 for post, unless otherwise specified.

Allowable unit stresses

Bending: (In terms of radius)

compact - Fb = 0.66 Fy (j); if $\left[\frac{Fy}{E}\left(\frac{R}{t}\right)\right] \le 0.063$

non-compact - $Fb = \left[0.39 + 0.017\frac{E}{Fy}\left(\frac{t}{R}\right)\right](Fy)(j)$; $if\ 0.063 < \frac{Fy}{E}\left(\frac{R}{t}\right) < 0.13$

non-compact - $Fb = \left[0.39 + 0.017\frac{E}{Fy}\left(\frac{t}{R}\right)\right](Fy)(j)$; $if\ 0.13 < \frac{Fy}{E}\left(\frac{R}{t}\right)$

Shear: (Section 5.11.1 – round) (Based on radius of pipe)

Fv = 0.33 Fy (j) ; when $\left(\frac{Fy}{E}\right)\left(\frac{R}{t}\right)^{\frac{3}{2}} \le 0.44$

$Fv = 0.145\ E\left(\frac{t}{R}\right)^{\frac{3}{2}}$; when $\left(\frac{Fy}{E}\right)\left(\frac{R}{t}\right)^{\frac{3}{2}} > 0.44$

Axial compression: (Section 5.10)

$Fa = \left[\frac{0.52\pi^2 E}{\left(\frac{kl}{r}\right)^2}\right](j)$; if $\frac{kl}{r} > \sqrt{\frac{2\pi^2 E}{Fy}}$

$Fa = \left\{0.52\,Fy - \left[\frac{0.13\,Fy^2}{\pi^2 E}\left(\frac{kl}{r}\right)^2\right]\right\}(j)$; if $\frac{kl}{r} < \sqrt{\frac{2\pi^2 E}{Fy}}$

Actual stresses

$fa = \frac{P}{A}$ A = area of trial member

$fb = \frac{M}{S}$ S = section modulus of trial member

$fv = \frac{2V}{A} + \frac{(T)(12)}{2\pi R^2 t}$ R = radius to center of pipe wall

t = pipe thickness

SOUTH CAROLINA
LICENSED PROFESSIONAL ENGINEER
No. 38665
DAVID A LALLONE

Sep 8 2023

Member selection - Steel Pipe (cont.)

Check for combined stresses. Below are the default CSR limits used unless noted in provisions.

For base of cantilever upright (Eq 5.12.1-1)

$$CSR = \frac{fa}{0.6Fy} + \frac{fb}{C_A Fb} + \left(\frac{fv}{Fv}\right)^2 \le 1.0$$

For connection end of cantilever truss (Eq 5.12.2.1-1)

$$CSR = \frac{fa}{0.6Fy} + \frac{fb}{Fb} + \left(\frac{fv}{Fv}\right)^2 \le 1.0$$

For intermediate points of truss chords (Eq 5.12.2.1-2)

$$CSR = \frac{fa}{Fa} + \frac{fb}{\left(1 - \frac{fa}{F'e}\right)Fb} + \left(\frac{fv}{Fv}\right)^2 \le 1.0 \quad \text{where,} \quad F'e = \frac{12\pi^2 E}{23\left(\frac{kL}{r}\right)^2}$$

For ends and intermediate points on chords where $\frac{fa}{Fa} \le 0.15$ (Eq 5.12.2.1-4)

$$CSR = \frac{fa}{Fa} + \frac{fb}{Fb} + \left(\frac{fv}{Fv}\right)^2 \le 1.0$$

SOUTH CAROLINA
LICENSED PROFESSIONAL ENGINEER
No. 38665
DAVID A LALLONE

Sep 8 2023

Truss Splice Design (if required)

Below is the standard truss splice design that will be used unless otherwise specified or indicated on design printouts and/or drawings.

Design for the average of the maximum chord load and the strength of the member but not less than 75% of the strength of the member. (AASHTO 10.18.1)

Assume point of contraflexure midway between the bolt and toe of weld.
Use A709, Grade 50 Plate (Fy = 50000 psi)
Use ¼" minimum outside weld
Use A325 bolts (Ft = 38000 psi) (AASHTO Table 10.32.3B)
Bolt circle = OD + 3"(±)

Loads

$P_{TOT} = \frac{\text{Max Chord "Pc"} + (A)(Ft)}{2}$ or $(0.75)(A)(Ft)$, whichever is greater

$P = \frac{P_{TOT}}{\pi(OD)}$ kips / linear inch of circumference $\qquad e = \frac{BC - (OD + \frac{1}{2})}{4}$

M = P * e kips / linear inch of circumference

Allowable Stresses

Plate - Fb = 0.750 (Fy) (j)
Weld - Fv = 21.60 (j)
Pipe - Ft = 0.660 (Fy) (j)

Determine bolts

$f_t = Ft\ (A_t)\ (j)$; A_t = tensile stress area

No Req'd = $\frac{P_{TOT}}{f_t}$

Determine plate thickness

$S = \frac{M}{Fb}$ in^3 / lin in of circum

$t = \sqrt{\frac{6\,S}{b}}$ b = 1" of circum

Determine weld

Iv = value of weld $I = \pi(OD)(\text{Pipe Thk})(0.707)(Fv)$

Size of weld $O = \frac{P_{TOT} - Iv}{\pi(OD)(0.707)(Fv)}$; ¼" minimum

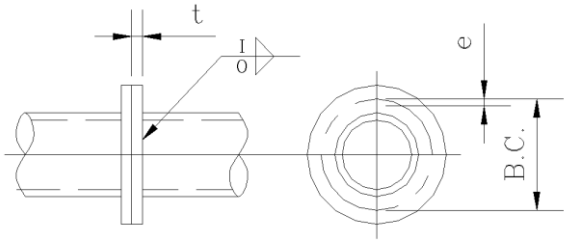



Sep 8 2023

Vibration and Fatigue Design

Cantilevers shall be designed to resist the effects of vibration and fatigue according to Article 11.7 and modified by the fatigue importance factors in Article 11.6, Table 11.6-1, and page 11-5 of the specifications which states the structure should be checked for fatigue due to galloping, natural wind gusts and truck induced wind gusts.

Because Vibration and Fatigue is subject to ongoing research by AASHTO / NCHRP, values shown in design may be based on most current AASHTO specification.

Galloping

These structures consist of a quad-chord truss, which do not exhibit galloping due to stiffness from truss.

Natural wind gust

Each cantilever structure will be designed to resist a static natural wind gust pressure range of 5.2 (C_d) (I_f) according to Article 11.7.1.2. The pressure is applied to horizontal surface of the sign and the structure.

Truck induced wind gust

Each cantilever with walkway and variable message signs (VMS) shall be designed to resist the effects from truck induced wind gusts. The pressure range for truck induced gusts shall be 18.8 (C_d) (I_f) and adjusted for magnitude per Article 11.7.1.3 and is applied vertically to the horizontal surfaces of the sign, walkway and truss. The pressure is applied in the vertical direction to the horizontal surfaces of the sign, walkway, and truss. The pressure range shall be applied along any (12-ft) length to create maximum stress range, excluding any portion not directly over traffic lanes. Structures without VMS signs or walkway will be checked only when the diameter of the chords exceeds that of a 6" nominal size pipe.



Sep 8 2023

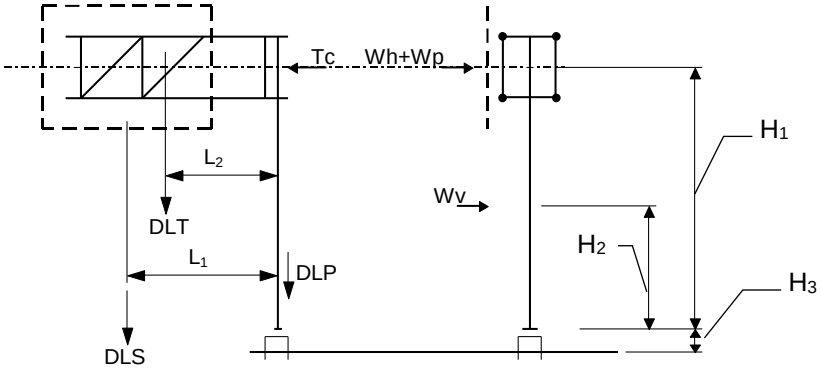

DLS = Weight of sign
DLT = Weight of truss
DLP = Weight of upright

Wh = Wind on truss
Wp = Wind on sign
Wv = Wind on upright
Tc = 0.2 (Wh + Wp + Wv)

NOTE: Loads in kips & dimensions in feet

SOUTH CAROLINA
LICENSED PROFESSIONAL ENGINEER
No. 38665
DAVID A LALLONE

Sep 8 2023

CALCULATION OF FOOTING CORNER STRESSES

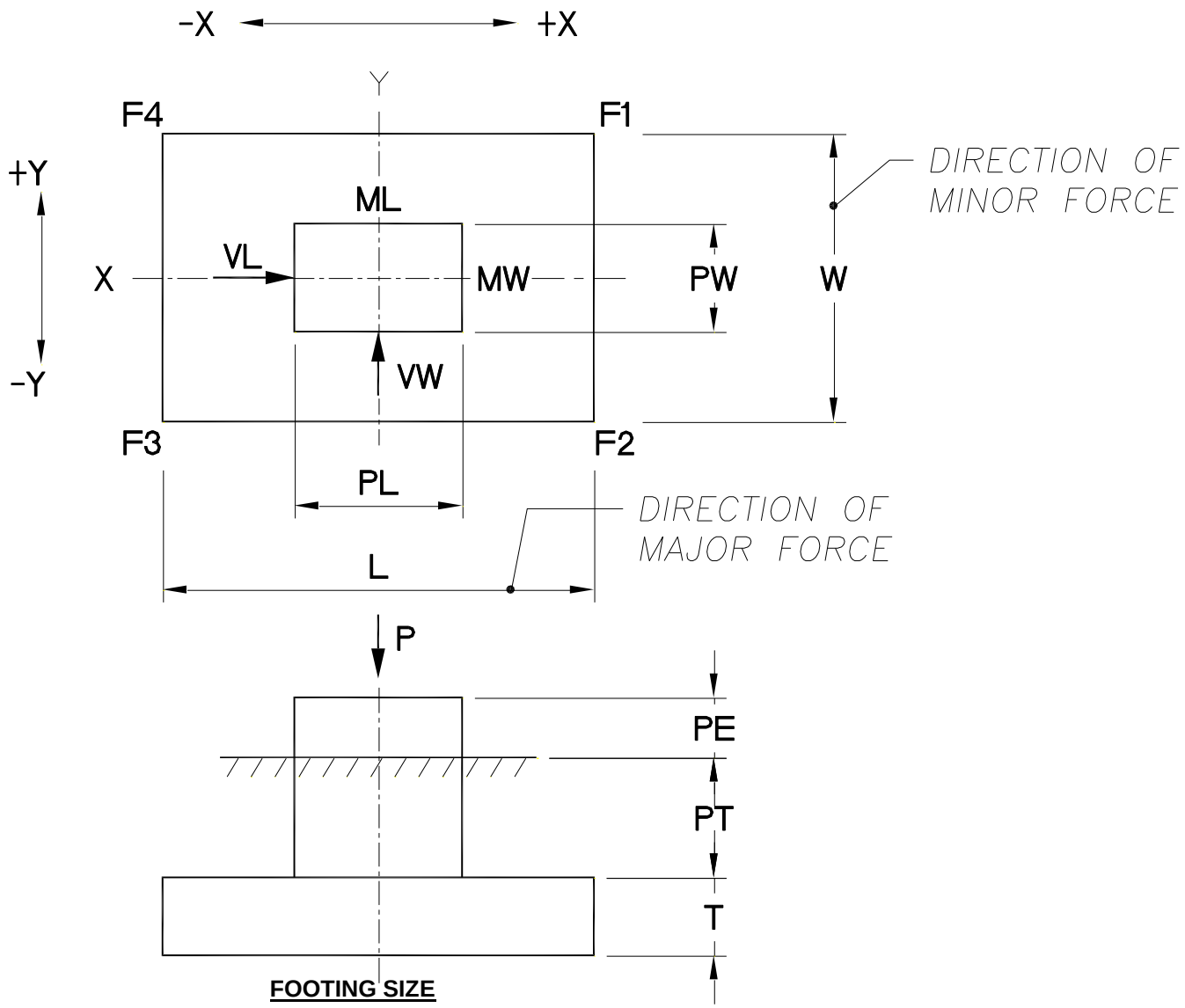

FOOTING SIZE

Wc = WEIGHT OF CONCRETE = 150 LBS / CUBIC FOOT ASSUMED

Ws = WEIGHT OF SOIL

INPUT VALUES ARE AT TOP OF PEDESTAL

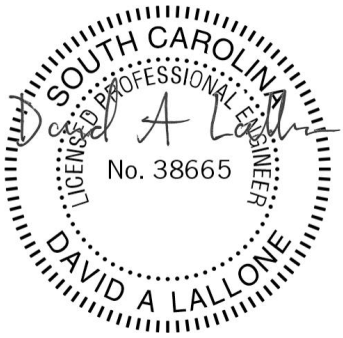

Sep 8 2023

Uncracked Section (No Tension)

$$F_i = \frac{P_t}{A} \pm \frac{Mx(y)}{Ix} \pm \frac{My(x)}{Iy}$$

P_s = weight of soil above pad
P_c = weight of concrete
P = weight of structure

Axial load at bottom of footing, $P_t = P + P_c + P_s$

Moments at bottom of footing

$Mx = Mw + Vw\ (T + PT + PE)$
$My = M_L + V_L\ (T + PT + PE)$

Footing corner stresses

$$F1 = \frac{P_t}{A} + \frac{Mx(y)}{Ix} + \frac{My(x)}{Iy}$$

$$F2 = \frac{P_t}{A} - \frac{Mx(y)}{Ix} + \frac{My(x)}{Iy}$$

$$F3 = \frac{P_t}{A} - \frac{Mx(y)}{Ix} - \frac{My(x)}{Iy}$$

$$F4 = \frac{P_t}{A} + \frac{Mx(y)}{Ix} - \frac{My(x)}{Iy}$$

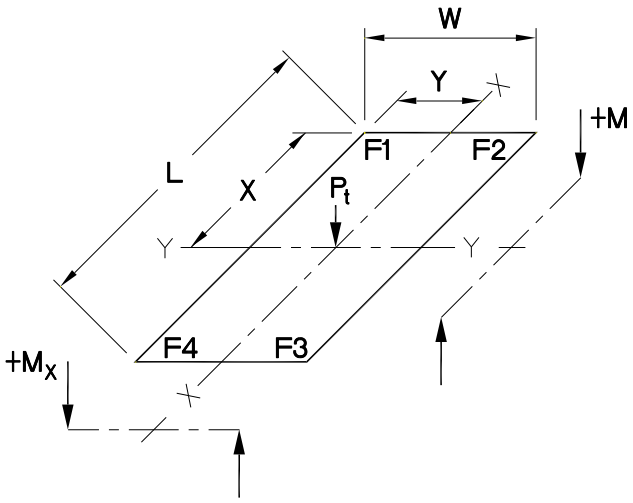

DESIGN MODEL AT BOTTOM OF FOOTING

Note: If F3 is negative (in tension), cracked section must be calculated

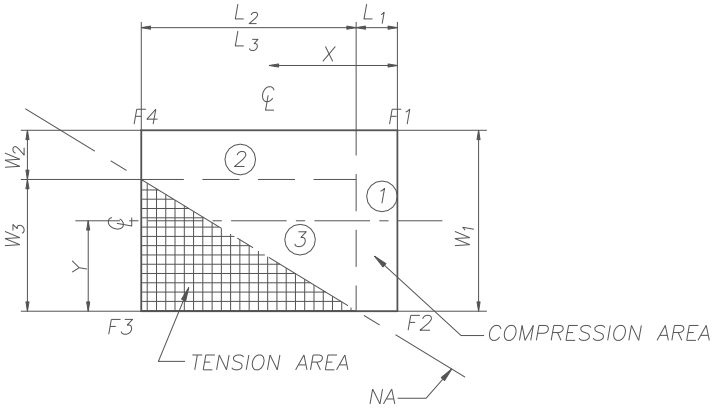

General Flexure Formula

$$F_i = \frac{P_t}{A} \pm \left[\frac{Mxc - Myc\left(\frac{Ixcyc}{Iyc}\right)}{Ixc - \frac{(Ixcyc)^2}{Iyc}}\right] Y' \pm \left[\frac{Myc - Mxc\left(\frac{Ixcyc}{Ixc}\right)}{Iyc - \frac{(Ixcyc)^2}{Ixc}}\right] X'$$

STRESS DIAGRAM - F3 NEGATIVE

Cracked Section - Case 1
Stresses are calculated at bottom of footing

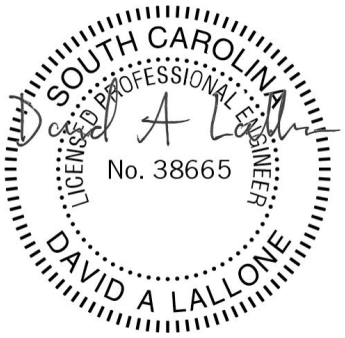

Sep 8 2023

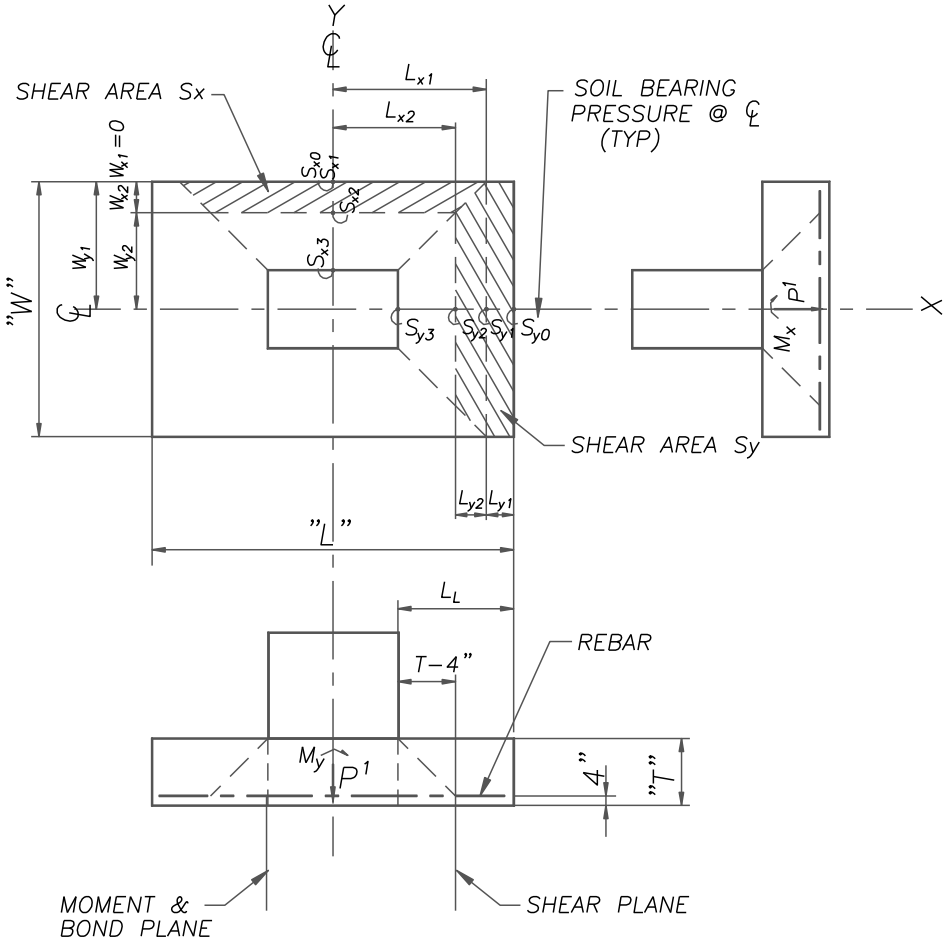

FOOTING MOMENT AND SHEAR MODEL

Uniform weight of concrete and soil, Pcs = (T) (Wc) + (PT) (Ws)

SOUTH CAROLINA
LICENSED PROFESSIONAL ENGINEER
No. 38665
DAVID A LALLONE

Sep 8 2023

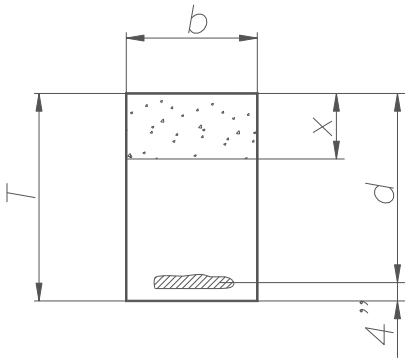

Use ASTM A615, Grade 60 rebar

Fy = 60 ksi f 'c = varies (psi)

Fs = 24 ksi $n = \frac{E}{57000\sqrt{f'c}}$

Increase allowable stresses 133%.

Trial:

Balance areas so that $x = \frac{3}{8}d$

Ms = Myy or Mxx

$Ast = \frac{12(Ms)}{(d - \frac{x}{3})(Fs)(1.33)}$ $ld_m = \frac{(0.05)(d_b)(Fy)}{\sqrt{f'c}}$

Check concrete stresses

Allowable stresses:

$f_{cr} = (0.4)(f'c)(1.33)$

$v_{cr} = (0.95\sqrt{f'c})(1.33)$

$p = \frac{Ast}{bd}$ $k = \sqrt{2np - (np)^2} - np$

$j = 1 - \frac{k}{3}$

Actual stresses:

$f_{ca} = \frac{12(Ms)}{(b)(k)(j)(d)^2(0.5)}$

$v_{ca} = \frac{Vs}{(b)(j)(d)}$

Vs = DTSy or DTSx

Check development length (Bond)

$ld_r = \frac{Mt}{(2)(Vs)} + la$ (la = 0)

Mt = (Ast) (Fy) (0.85) (d)

ld_a = LL - 3" or WW - 3"

Recheck As

$As_r = \frac{(12)(Ms)}{(j)(d)(Fs)(1.33)}$

Note: The area of steel does not include the steel located in the top of pad. That steel is shown to account temperature only.

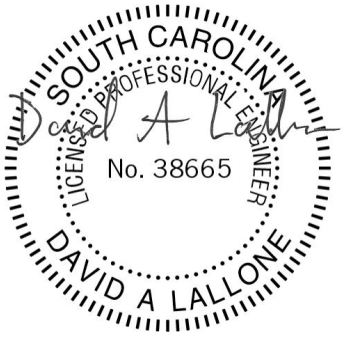

Sep 8 2023

DESIGN OF PEDESTAL WITH BI-AXIAL BENDING

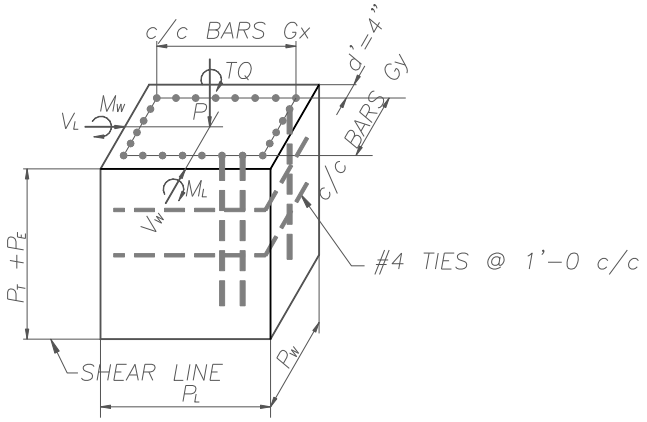

d' = 3"(cover) +
½ (#4 Tie) +
½ (½ of #8 bar) assumed +
4"

Minimum Reinforcement (1%)

Asm = (0.01) (PL) (PW) (144) in^2

DESIGN MODEL

Moments at base

My = M_L + V_L (PT + PE)
Mx = Mw + Vw (PT + PE)

Shear at base (acting on rebar only)

$V_1 = \sqrt{VL^2 + VW^2}$

$V_2 = \frac{TQ}{Gx} + \frac{TQ}{Gy}$

$V_t = V_1 + V_2$

Trial reinforcing (Assume #8 bar - 0.79 in^2)

$Qty = \frac{Asm}{0.79}$

Combined stress ratio

$CSR = \left(\frac{fv}{Fv}\right)^2 + \frac{fa}{Fa} + \frac{fbx}{Fbx} + \frac{fby}{Fby} \le 10$

Allowable stress (increase by 33%)

Fv = (0.33) (Fy) (1.33) = 26334 psi
Fa = (0.4) (f 'c) (1.33)
Fbx = Fby = (0.4) (f 'c) (1.33)

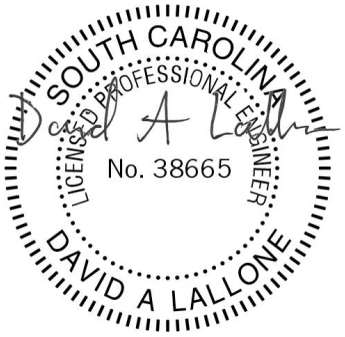

Sep 8 2023

Actual Stress

$$fv = \frac{Vt}{Ast} \qquad fa = \frac{P}{Ag} \qquad fbx = \frac{(Mx)(Cx)}{Ix} \qquad fby = \frac{(My)(Cy)}{Iy}$$

Ast = area of reinforcement used
Ag = gross area of pedestal

$$Cx = \frac{PL}{2} \qquad Cy = \frac{PW}{2}$$

$$Ix = \frac{(PW)(PL)^3}{12} + \frac{(2n)(Ast)(Gx)^2}{6}$$

$$Iy = \frac{(PL)(PW)^3}{12} + \frac{(2n)(Ast)(Gy)^2}{6}$$

Since the pedestal is almost in pure bending (P load is negligible), the following stress ratio must be used.

$$CSM = \frac{Mx}{Mo_x} + \frac{My}{Mo_y} \le 1.0$$

Mo_x = (0.40) (As) (Fy) (1.33) (PW - 2d')

Mo_y = (0.40) (As) (Fy) (1.33) (PL - 2d')

As = tension steel = $\frac{Ast}{4}$

Review CSR and CSM and adjust rebar size if required.

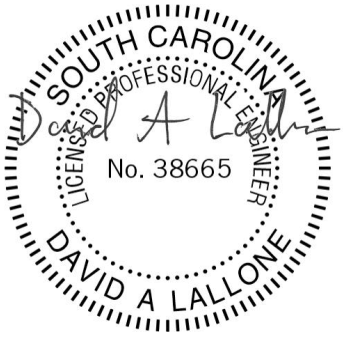

Sep 8 2023

Check torque (Cantilever structures only)

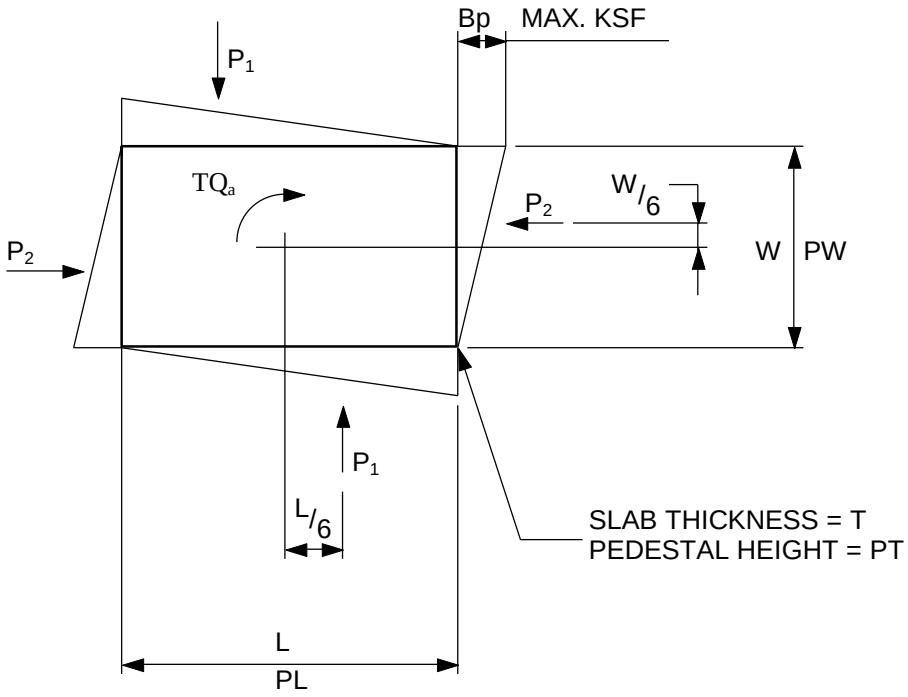

Bp = Maximum soil bearing pressure

P_1 = (0.5) (Bp) (L) (T)

P_2 = (0.5) (Bp) (W) (T)

Maximum torque allowable for footing size

$$TQ_m = (2)(P_1)\left(\frac{L}{6}\right) + (2)(P_2)\left(\frac{W}{6}\right)$$

Calculate torque allowable on pedestal same as above.

TQ_a = actual torque from structure printout

If $TQ_a > TQ_m$ increase footing size or thickness

SOUTH CAROLINA
LICENSED PROFESSIONAL ENGINEER
No. 38665
DAVID A LALLONE

Sep 8 2023

NOTE: Loads in kips, dimensions in feet

$M_{DL} = (DLS)(L_1) + (DLT)(L_2) + (tc)(H_1)$

$M_{WL} = (WH+WP)(H_1) + (WV)(H_2)$

$P_{WL} = WH + WP + WV$

$$\text{Eff H} = \frac{M_{WL}}{P_{WL}}$$

Use Eff H to determine Eff P_{DL}

$$\text{Eff } P_{DL} = \frac{M_{DL}}{\text{Eff H}}$$

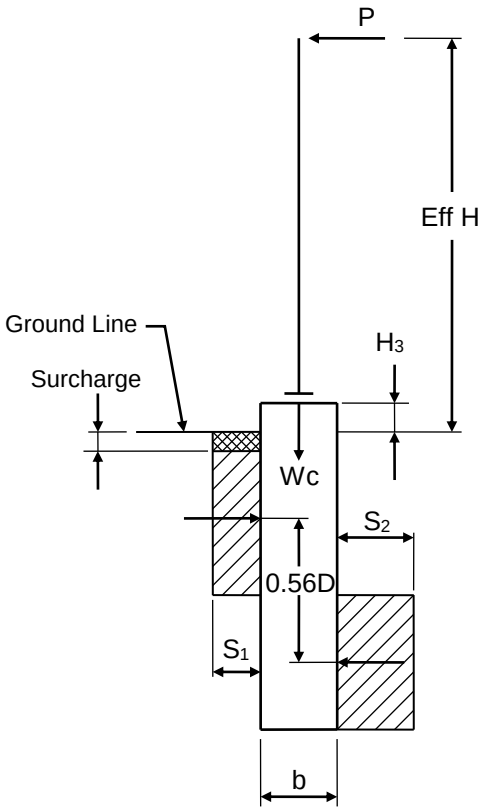

RESULTANT

$$P = \sqrt{(P_{DL})^2 + (P_{WL})^2}$$

$$D = \frac{2.37\,P + \sqrt{5.617\,P^2 + 10.56\,(S_1\,b * P * H)}}{2\,S_1\,b}$$

REINFORCING

MR = P (Eff H)

Fy = Rebar yield (KSI)
Ab = Area of single bar (in^2)
As = Req'd area of reinforcement (in^2)
D_1 = Diameter of rebar cage (in)
J = 1.33 for Group II only

$$As = \frac{12\,(MR)}{0.12\,(Fy)\,(D_1)\,(J)} \geq 1\%\ \text{Cylinder Area}$$

$$\text{Number of Bars req'd} = \frac{As}{Ab}$$

$$\text{Spacing} = \frac{\pi\,D_1}{\text{No of bars}}$$

The use of #4 hoops @ 1'-0 (±) c /c will be used for cylinder diameters 4 ft and less. All cylinders larger than 4 ft will used #5 hoops, unless otherwise specified on the printouts.

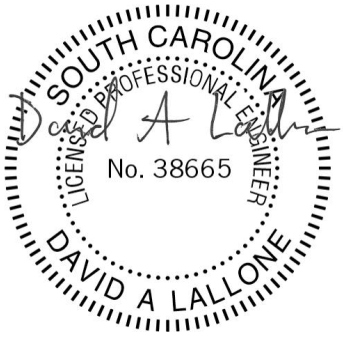

Sep 8 2023

TORSION WINGS

(If Required)

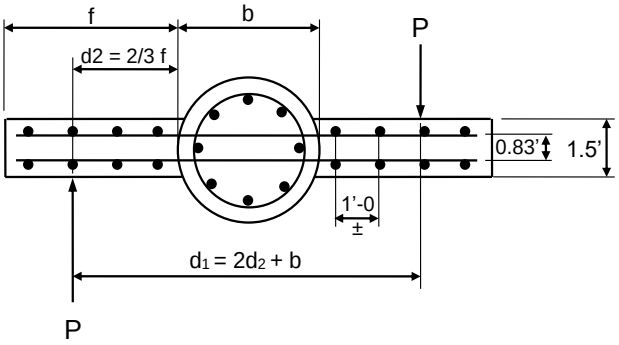

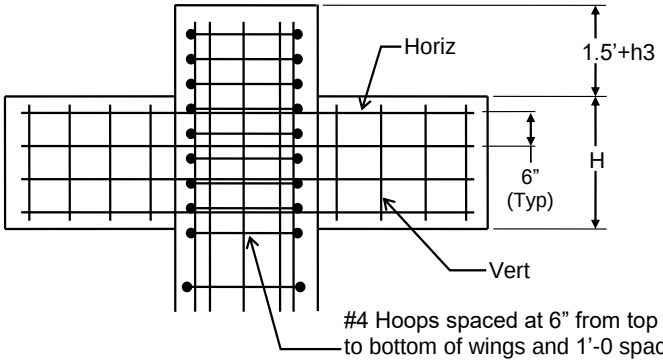

#4 Hoops spaced at 6" from top of cylinder to bottom of wings and 1'-0 spacing from bottom of wings to bottom of cylinder.

$$P = \frac{\text{Torque}}{d_1}$$

$$H = \frac{2\,P}{f\,S_1}$$

Reinforcing

$MR = (P)(d_2)$

$$As = \frac{12\,(MR)}{(24)(0.86)(d_3)(J)}$$

$$\text{Number of horizontal bars required} = \frac{As}{Ab}$$

Horizontal bars at 6" c/c each side and #4 vertical bars at 1'-0 (±) c/c each side, unless otherwise specified on the design printouts.



Sep 8 2023

0

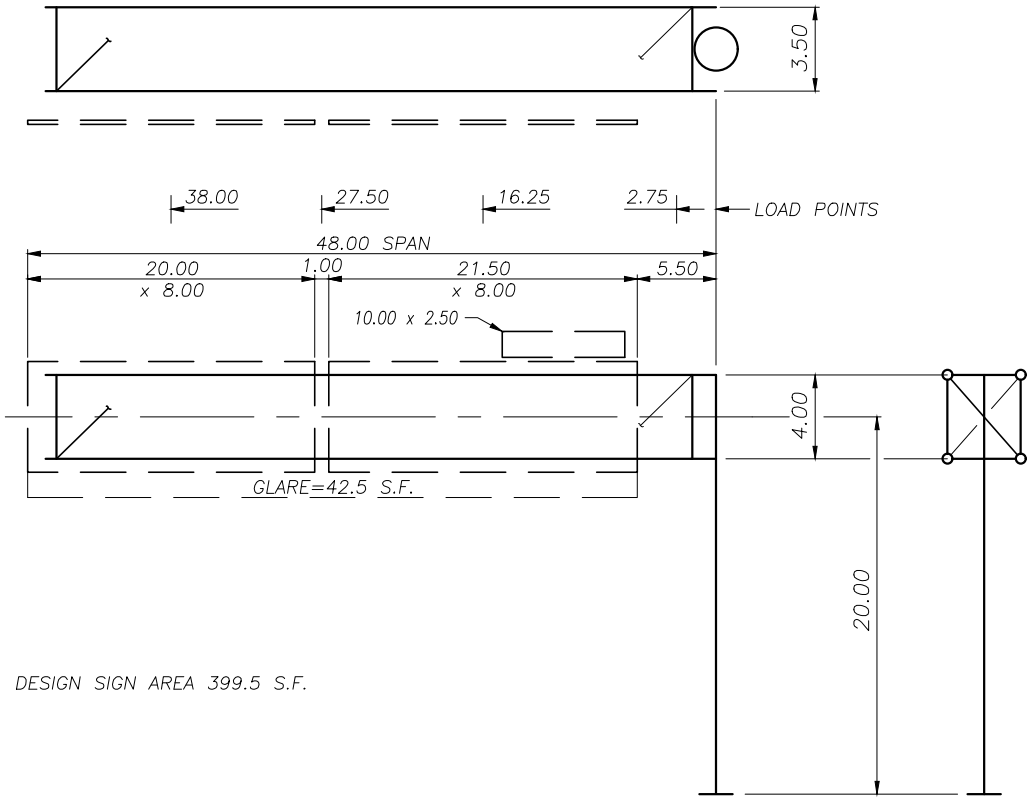

DESIGN SIGN AREA 399.5 S.F.

12 – 1.75"ø ANCHOR BOLTS

STR NO: OH–19
STA NO: 18+18.94(EB)

CHORDS	4.500 x 0.237
VERTICAL DIAGONALS	1.900 x 0.145
VERTICAL STRUTS	1.900 x 0.145
HORIZ STRUTS & DIAG'S	1.900 x 0.200
POST	30.000 x 0.500

SOUTH CAROLINA LICENSED PROFESSIONAL ENGINEER
David A Lallone
No. 38665
DAVID A LALLONE

Oct 25 2023

Box Truss Cantilever Structure Design

Reference Walpar Job Number : C3546
Reference Design Information Sheet Number : C2 Structure : OH-19 Station : 18+18.94(EB)
State : SC
AASHTO Specification : 6th Edition Fatigue Category : II
Design Wind Velocity (V) : 100 mph

Structure Dimensions

Span (S)	48.00 ft	Truss Hgt (U)	4.00 ft	Truss Depth (Y)	3.50 ft
Post Hgt (H)	20.00 ft	Coeff of Hgt (Kz)	0.94		

Sign Information

Actual Sign Area: 399.50 sq ft

Z Ecc to bottom of glare screen

Sign	Load (i)	Lgth (B_i)	Hgt (D_i)	Location (a_i)	Unit wgt	Depth	C_d	Z Ecc	Area	Exit Panel
1	2	21.50	8.00	16.25	7.00		1.19	5.00	219.00	X
2	4	20.00	8.00	38.00	7.00		1.19	5.00	180.50	

Walkway Information

	Lgth	Location	Width	Unit wgt	Y Ecc
WW1	42.50	26.75	2.54	60	4.95
WW2					

Load Summary Estimate

Weight of truss only	3604 lbs
Weight of truss with signs	6401 lbs
Post weight †	4246 lbs

† includes additonal wgt from base plate



Oct 25 2023

0

C2 - 1 of 8

Walpar (c) 2014

Box Truss Cantilever Structure Design

Job No : C3546 Structure No : OH-19 Station : 18+18.94(EB)

Loads

Unit wind load on sign(s)/C_d: 27.43 psf Unit wind load on exposed truss: 32.92 psf Unit wgt of truss: 65.41 plf Unit ice wgt on truss: 24.76 plf

Truss Area for Wind Load (A_t): 1.11 sq ft / ft ***All loads in charts in lbs, ft or ft-lbs unless noted**

Truss Load Summary For Actual Sign & WW Condition

	Load (i)	Dead	Wind (W_p & W_h)	Ice
Sign and Truss Loads	1	360	202	136
	2	2939	7150	1189
	3	65	37	25
	4	2572	5901	1037
WW Loads	WW1	2550	853	1134
Post Reaction (R_1)		8486	14143	3521
Truss Moments (M)		216493	364811	90114

** WW/Equipment Loads are incorporated into Sign and Truss Loads to determine Reactions and Moments.

Post Loads

Dead	Wind	Ice	Group II t_c	Group III t_c
3966	679	518	136	204

Load Combinations for Design Sign Area (Max Condition)

Truss Member Loads	DL	DL +WL	DL+1/2 WL+IL
Truss Chords (Pc)	27062	79177	64384
Vertical Diagonals (Pv)	14343	14343	22002
Horizontal Diagonals (Ph)	5171	12219	6830
Vertical Struts (Psv)	9797	11861	15029
Horizontal Struts (Psh)	4860	7071	7897

Serviceability Requirements

Truss DL Deflection	0.97 in.
Total DL Deflection	3.43 in.
Limit for Deflection	3.84 in.
Camber Used (Cu)	6.00 in.
Permanent Camber (Cp)	5.03 in.
Post Tilt	0.62 in.
Post Deflection Limits	6.60 in.
D^2/400 Limit	2.43 in.
Horizontal WL Deflection	3.06 in.
Horizontal Defl Limits	14.40 in.

	Post Loads					
	M_N	M_{tc}	M_z/Torsion	V_N	V_{tc}	Axial
Group II Comb. 1 (DL+WL)	294930	275780	372036	15009	2964	12452
Group III Comb. 1 (DL+1/2WL+IL)	150833	335639	186018	7598	1482	16492
Group II Comb. 2 (DL+WL)	178597	303590	244723	9080	4447	12452
Group III Comb. 2 (DL+1/2WL+IL)	92635	350155	122361	4633	2223	16492



Oct 25 2023

0

C2 - 2 of 8

Walpar (c) 2014

Box Truss Cantilever Structure Design

Job No : C3546 Structure No : OH-19 Station : 18+18.94(EB)

Material Information

	Pipe Size (Min Yield)	Unbraced Lgth	CSR Group II	CSR Group III
Truss Chords	4.500 x 0.237 (52 ksi)	8.55 ft	0.80	0.65
Vertical Diagonals	1.900 x 0.145 (52 ksi)	5.86 ft	0.58	0.88
Vertical Struts	1.900 x 0.145 (52 ksi)	4.00 ft	0.56	0.70
Horizontal Diagonals	1.900 x 0.200 (52 ksi)	5.53 ft	0.69	0.39
Horizontal Struts	1.900 x 0.200 (52 ksi)	3.50 ft	0.23	0.26
Post	30.000 x 0.500 (52 ksi)	22.00 ft	0.42	0.33

Structure Input (For Foundation Designs)

Sign DL React (DLS)	5.35 k
Truss DL React (DLT)	3.14 k
Post DL React (DLP)	3.97 k
Truss WL React (Wh)	0.24 k
Truss WL React (Wp)	13.28 k
Post WL React (Wv)	0.68 k
Dist. To DLS & Wp (L1)	26.08 ft
Distance To Wh (L2)	24.00 ft
Distance To Rh (H1)	20.00 ft
Distance To Wv (H2)	11.00 ft
Torque at Base (Mt)	372.0 k-ft
Min Ped Wth (PL & PW)	4.50 ft

Structure Detail Information

Truss to Post Connection

Connection Bolt Qty & Size	12 - ¾" ø A325
Connection Plate Weld "A"	¼ fillet
Connection Plate Weld "B"	3/16 fillet
Connection Plate Welds "C"&"D"	3/16 fillet

Post Detail

Maximum Anchor Bolt Pullout	43734 lbs
Anchor Bolt Circle	36 in. Dia
Anchor Bolt Yield	55 ksi
Anchor Bolt Qty & Size	12 - 1.75" ø
Anchor Bolt Length (Embed Used)	4.50 ft (3.5 ft)
Anchor Bolt CSR	0.60
Base Plate Thickness	1.75 in.
Base Plate Weld	5/16 fillet
Gusset Plates at Base	12-½" x 12"

Truss Chord Splices

Maximum Design Load at Splice	93990 lbs
Splice Moment (per in. of circum)	4155 in-lbs
Splice Bolt Circle	7.5 in.
Splice Bolt Qty & Size	6 - ¾" ø A325
Splice Plate Thickness	0.75 in.
Splice Plate Weld	¼ fillet

ACI 318 App D checked with Min. Req'd Embed 2.93 ft

Sign Hanger Detail

Design hanger spacing 9.00 ft

Sign Hanger U-Bolt type ASTM-A307

SIGN	Max UBL at End	Max Spacing	Hanger U-Bolt	Sign Hanger	Hanger Support
1	3.00 ft	9.00 ft	2 - ½" ø	L5x3x5/16	W6x9
2	3.00 ft	9.00 ft	2 - ½" ø	L5x3x5/16	W6x9



Oct 25 2023

0

Walpar (c) 2014

Box Truss Cantilever Structure Design

Job No : C3546 Structure No : OH-19 Station : 18+18.94(EB)

Vibration and Fatigue (Per AASHTO 6th Edition)

Natural Wind Gust Load on Signs/C_d 4.42 psf
Natural Wind Gust Load on Truss 5.30 psf

Truck Induced Gust Load on Truss 17.99 psf
Extent of Truck Induced Gust 12.00 ft
Truss Area for Truck Induced Gust 1.10 sq ft / ft
Location of Center of Truck Induced Gust 42.00 ft

Truss Load Summary for Vibration and Fatigue

Loads (i)	NWG(i)	TIG(i)
1	33	
2	1036	
3	6	
4	843	238
WW1	430	561
Post Reaction	2347	799
Maximum Moments	60607	33575

Member Forces for Vibration and Fatigue

Truss Members	P_{NWG}	P_{TG}
Truss Chords	8658	4197
Vertical Diagonals	-	585
Horizontal Diagonals	1853	-
Vertical Struts	-	400
Horizontal Struts	1174	-

	Post Loads at Base				
	M_N	M_Y	M_z/Torsion	V_N	Axial
Natural Wind	49883	-	60607	2614	-
Truck Induced Gust	-	33575	-	-	799

Vibration and Fatigue Stresses

	NWG (ksi)	TIG (ksi)	Allowable (ksi)
Post/Truss Connection	1.23	0.59	2.60
Truss Vertical Diagonals	-	0.50	1.20
Truss Horizontal Diagonals	1.10	-	1.20
Truss Vertical Struts	-	0.50	1.20
Truss Horizontal Struts	1.10	-	1.20
Post Base Connection	0.92	0.62	7.00
Base Stiffener Termination	1.78	1.20	7.00
Anchor bolts	4.10	2.83	7.00



Oct 25 2023

0

Walpar (c) 2014

Box Truss Cantilever Structure Design

Job No : C3546 Structure No : OH-19 Station : 18+18.94(EB)

Foundation Design

Boring Type SPT Boring Designation G-054A
Major Soil Type Cohesive Depth to Water NA Surcharge (Frost) Depth 2 ft
Ground Slope 0:1 Consider slope stability? N

SOIL TYPES	
01-GP	07-SM
02-GW	08-ML
03-GM	09-MH
04-GC	10-SC
05-SP	11-CL
06-SW	12-CH

Soil Properties

Depth	N Value	γ' (pcf)	Φ (deg)	S_u (lbf/ft^2)	α	β	f_{SN} (lbf/ft^2)	$(N_1)_{60}$	Soil Type
**0 - 2	8	104	32			0.70	145	16	07
2 - 6	11	116	28	1375	0.55		756	22	11
6 - 8	8	113	27	1000	0.55		550	16	11
8 - 13.5	15	120	28	1875	0.55		1031	30	11
13.5 - 15	30	135	29	3750	0.55		2063	55	11
15 - 35	30	135	27	3750	0.55		2063	25	11

* Soil Type 13 indicates rock layer with N>60 for cohesionless soil or N>40 for cohesive soils
**Top 2.0 ft will not contibute to any load resistance + 1 diameter at bottom will not contribute to frictional load resistance.

Soil Bearing Capacity for Spread Footing Design

Footing width, B 12.00 ft
Footing length, L 23.00 ft
Eccentricity, e_L 1.42 ft
Eccentricity, e_B 1.37 ft
Effective ftg width, B' 9.26 ft
Effective ftg width, L' 20.17 ft

Ultimate bearing capacity, q_{ult} 108.69 ksf
Allowable Bearing Capacity 36.00 ksf
Bearing Capacity used *** 2.00 ksf

Total wgt of load, foundation and soil, Pt 196.36 k
Normal moment, ML 277.86 ft-k
Transverse moment, Mw 269.47 ft-k
Distance from ground to bottom of footing, d_{min} 4.75 ft
Distance from ground to bottom of footing, D_f 4.75 ft
Distance to ground water from bottom of ftg, z_w
Overburden pressure at base of footing, q 0.59 ksf
Weighted average soil unit weight, γ 122 pcf

***Note: Bearing capacities greater than 4.0 ksf will rarely effect spread footing pad size



Oct 25 2023

0

Walpar (c) 2014

Box Truss Cantilever Structure Design

Job No : C3546 Structure No : OH-19 Station : 18+18.94(EB)

Cantilever Spread Footing Design

Material/Soil Specifications and Safety Factors

Concrete f'_c :	3000 psi	Concrete wgt :	150 pcf
Rebar yield f_y :	60000 psi	Rebar F_s :	24000 psi
Soil Bearing Capacity :	2000 psf	Soil unit wgt :	110 pcf

Load Safety Factor[1] : 1.15

Loads and Locations From Structure

Sign DL React (DLS)	5.35 k	Distance to DLS & Wp (L1)	26.08 ft
Truss DL React (DLT)	3.14 k	Distance to Wh (L2)	24.00 ft
Post DL React (DLP)	3.97 k	Distance to Rh (H1)	20.00 ft
Truss WL React (Wh)	0.24 k	Distance to Wv (H2)	11.00 ft
Truss WL React (Wp)	13.28 k	Torque at Base (M_t)	372.0 ft-k
Post WL React (Wv)	0.68 k	Min Ped Width (PL/PW)	4.50 ft

Loads at Top of Pedestal from Structure

Axial load (P)	12.45 k		
Moment (ML)	277.86 ft-k	Moment (Mw)	269.47 ft-k
Shear (VL)	14.20 k	Shear (Vw)	2.80 k

Final Spread Footing Design Sizes

Pad Length (L)	23.00 ft	Pedestal Width/Length	4.50 ft (PW/PL)
Pad Width (W)	12.00 ft	Pedestal Projection	6.75 ft (PE)
Pad Thickness (T)	1.50 ft	Ground line to Top of Pad	3.25 ft (PT)

Reinforcement

Pad	Pedestal
Top Each Way - #4 Bars @ 12" o.c.	40 - #8 Vertical Bars Equally Spaced
X Direction - 12 - #8 Bars @ 12" o.c.	10 - #5 Ties @ 11.7" o.c.
Y Direction - 23 - #4 Bars @ 12" o.c.	

Serviceability	Quantities
3.26% of footing in uplift	2731 lbs of reinforcement
Safety factor against overturning = 63.19	22.83 cyd of concrete

Uncracked Section Calculations

Wgt of soil above pad (Ps)	91.43 k		
Wgt of concrete (Pc)	92.48 k	Total Area (A)	276.00 ft²
Total Load (Pt)	196.36 k		
X	11.50 ft	Y	6.00 ft
Ix	3312.00 ft⁴	Iy	12167.00 ft⁴
Mx	346.86 k-ft	My	507.32 k-ft

Corner Stresses [Factored loads[1] (unfactored loads)]

F1	1.82 ksf (1.67 ksf)
F2	0.56 ksf (0.58 ksf)
F3	-0.40 ksf (-0.25 ksf)
F4	0.86 ksf (0.84 ksf)

Cracked Section Calculations [Factored loads[1] (unfactored loads)]

A1	161.98 ft² (195.19 ft²)	L1	13.50 ft (16.27 ft)	W1	12.00 ft (12.00 ft)
A2	78.48 ft² (62.80 ft²)	L2	9.50 ft (6.73 ft)	W2	8.26 ft (9.33 ft)
A3	17.77 ft² (9.01 ft²)	L3	9.50 ft (6.73 ft)	W3	3.74 ft (2.67 ft)
A'	258.23 ft² (266.99 ft²)				
Xc	0.57 ft (0.31 ft)	X1	4.75 ft (3.37 ft)	Y1	0.00 ft (0.00 ft)
Yc	0.33 ft (0.17 ft)	X2	-6.75 ft (-8.13 ft)	Y2	1.87 ft (1.34 ft)
		X3	-5.17 ft (-7.01 ft)	Y3	-3.51 ft (-4.22 ft)
Ixc	2811.80 ft⁴ (3047.37 ft⁴)				
Iyc	10816.38 ft⁴ (11364.95 ft⁴)				
Ixcyc	-734.71 ft⁴ (-435.66 ft⁴)				
Mxc	282.64 ft-k (267.78 ft-k)				
Myc	394.72 ft-k (379.85 ft-k)				
X'	12.07 ft (11.81 ft)				
Y'	6.33 ft (6.17 ft)				

Corner Stresses [Factored loads[1] (unfactored loads)]

F1	1.94 ksf (1.72 ksf)
F2	0.60 ksf (0.60 ksf)
F3	-0.42 ksf (-0.25 ksf)
F4	0.93 ksf (0.87 ksf)



Oct 25 2023

0

Walpar (c) 2014

Box Truss Cantilever Structure Design

Job No : C3546 Structure No : OH-19 Station : 18+18.94(EB)

Cantilever Spread Footing Design (cont.)

Moment and Shear Calculation Results

L_{x1}	6.00 ft	W_{x1}	0.00 ft	S_{y1}	1.03 ksf	S_{x1}	1.43 ksf
L_{x2}	3.42 ft	W_{x2}	2.58 ft	S_{y2}	0.91 ksf	S_{x2}	1.14 ksf
L_{y1}	5.50 ft	W_{y1}	6.00 ft	S_{y3}	0.86 ksf	S_{x3}	1.01 ksf
L_{y2}	2.58 ft	W_{y2}	3.42 ft	Pcs	0.58 ksf		
				DTS_y	6.82 k	DTS_x	2.51 k
				M_{YY}	23.49 ft-k	M_{XX}	4.99 ft-k

Reinforcement Calculations

f_{cr} : 1596 psi v_{cr} : 69 psi n : 9.29

b : 12.00 in d : 14.00 in x : 5.25 in

About Y Axis		About X Axis	
p :	0.0043	p :	0.0018
k :	0.25	k :	0.17
j :	0.92	j :	0.94
f_{ca} :	1064 psi	f_{ca} :	323 psi
v_{ca} :	44 psi	v_{ca} :	16 psi
Mt :	514741 in-lb	Mt :	109403 in-lb
ld_r :	37.75 in	ld_r :	21.78 in
ld_a :	108.00 in	ld_a :	42.00 in
ld_{min} :	54.77 in	ld_{min} :	27.39 in
A_{sr} :	0.69 in²	A_{sr} :	0.14 in²
A_s Used :	0.79 in²	A_s Used :	0.20 in²

Torque Calculations

P_1 :	34.50 k	P_{1P} :	14.63 k
P_2 :	18.00 k	P_{2P} :	14.63 k
TQ_m :	380.38 ft-k	T_u :	426.61 ft-k
TQ_a :	372.04 ft-k	T_{uo} :	136.07 ft-k
		A_{lr} :	5.09 in²
		A_{la} :	6.32 in²

Factor of safety against sliding (μ=0.40) : 5.53

Pedestal Calculations

V_1 : 14471 lbs V_2 : 0 lbs V_t : 0 lbs

About Y Axis		About X Axis	
C_x :	27.00 in	C_y :	27.00 in
G_x :	46.00 in	G_y :	46.00 in
f_a :	4.27 psi	fa :	6601 psi
F_a :	1596 psi	Fa :	26334 psi
f_{bx} :	110 psi	f_{by} :	156 psi
F_{bx} :	1596 psi	F_{by} :	1596 psi
M_x :	297425 ft-lb	M_y :	419849 ft-lb
M_{ox} :	869980 ft-lb	M_{oy} :	869980 ft-lb
I_x :	874216 in⁴	I_y :	874216 in⁴
A_g :	2916 in²	A_{sm} :	29.16 in²
A_{st} :	25.28 in²	A_s :	7.11 in²
QTY :	40	A_b :	0.79 in²
CSR :	0.23	CSM :	0.82



Oct 25 2023

0

C2 - 7 of 8

Walpar (c) 2014

Box Truss Cantilever Structure Design

Job No : C3546 Structure No : OH-19 Station : 18+18.94(EB)

Cantilever Cylindrical Footing Design

Material/Soil Specifications and Safety Factors

Concrete f '$_c$:	3000 psi	Concrete wgt :	150 pcf
Rebar yield f_y :	60000 psi	Min safety factor for torsion :	1.13
Reinforcement Clear :	4 in	Min safety factor for lateral load :	2.86

Loads and Locations From Structure

Sign DL React (DLS)	5.35 k	Dist. To DLS & Wp (L1)	26.08 ft
Truss DL React (DLT)	3.14 k	Distance To Wh (L2)	24.00 ft
Post DL React (DLP)	3.97 k	Distance To Rh (H1)	20.00 ft
Truss WL React (Wh)	0.24 k	Distance To Wv (H2)	11.00 ft
Truss WL React (Wp)	13.28 k	Footing Projection (H3)	6.75 ft
Post WL React (Wv)	0.68 k	Torque at Base (M_t)	372.0 ft-k

Loads at Top of Cylinder from Structure

Dead Load Moment (MDL)	271.57 ft-k	Effective height (Heff)	19.57 ft
Wind Load Moment (MWL)	277.86 ft-k	Lateral load from MDL (PDL)	2.84 k
Resultant Moment (MR)	402.95 ft-k	Resultant Lateral Load (PRL)	20.59 k
Wind Load Shear at Base (PWL)	14.20 k	Total Dead Load at Column Base (TDL)	12.45 k
Transverse Load (t_c)	2.84 k		

Torsion Calculation Results
(from Beta Method)

Cylinder Embedment	16.75 ft
Axial load	12.45 k
Torsional load	372.04 ft-k
Weight of shaft	66.80 k
Max Allow Torque on reinf CYL	413.70 ft-k
Side Resist. Capacity	233.3 k
Allowable side resist. torque	524.84 ft-k
Avg Su for Tip Resist. (ksf)	3.75
Tip Resist. Capacity	536.77 k
Allowable Tip Resist. Torque	67.2 ft-k
	0.0 ft-k
Total Allowable Torque	592.0 ft-k
Calc'd Torsional safety factor	1.59

Lateral Load Calculation Results
(from Brom's Method)

Soil friction angle Φ	28.6 deg
Soil unit weight γ	122 pcf
AVG $(N_1)_{60}$ over req'd dp (BPF)	36
Lateral load from structure	20.6 k
Moment from structure	402.9 ft-k
Rankine Passive Pressure Coeff. K_P	6.31
Ultimate soil resistance P_{ult}	1170 k
Allowable soil resistance P_{max}	544 k
Ultimate soil mom cap M_{ult}	8170 ft-k
Allowable soil mom cap M_{max}	3800 ft-k
Ground line moment	542 ft-k
Dist GL to 0 shear pt in CYL	3.99 ft
Maximum moment in shaft	583 ft-k

Final Cylindrical Footing Design Sizes

Req'd A_s	16.80 in²	Rebar Cage Dia (D1)	43.48 in
1% Cyl Area Min A_m	22.90 in²	Vertical bar spacing	7.19 in
Reinf Area Provided A_p	24.13 in²		

USE 54 in DIA x 28'-0 CYLINDER
w/ 19- # 10 VERT. BARS & 30 - #5 HOOPS
Extra Hoop 3 inches below top hoop

Serviceability

Calculated torsional / axial safety factors = 1.59 / 9.72
Calculated lateral safety factor = 14.01

Quantities

2646 lbs of reinforcement
16.49 cyd of concrete

SOUTH CAROLINA LICENSED PROFESSIONAL ENGINEER
David A Lallone
No. 38665
DAVID A LALLONE

Oct 25 2023

0

C2 - 8 of 8

Walpar (c) 2014

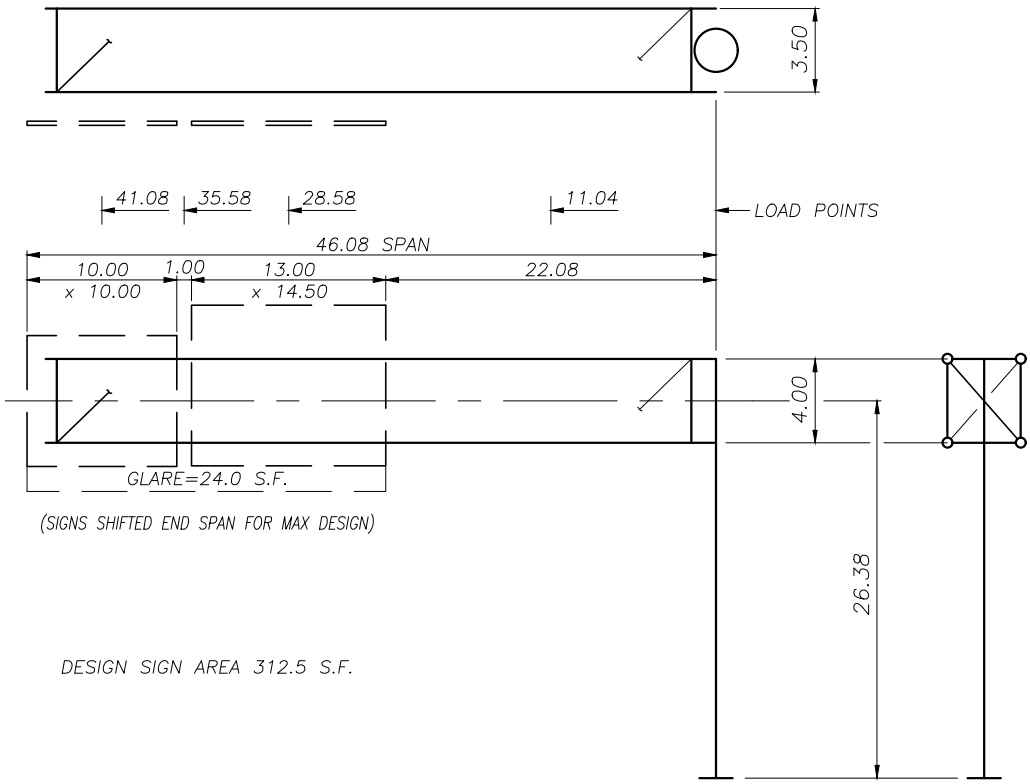

DESIGN SIGN AREA 312.5 S.F.

12 – 1.75"ø ANCHOR BOLTS

STR NO: OH–29
STA NO: 209+50.04(SB)

CHORDS	4.500 x 0.237
VERTICAL DIAGONALS	1.660 x 0.140
VERTICAL STRUTS	1.660 x 0.140
HORIZ STRUTS & DIAG'S	1.900 x 0.200
POST	30.000 x 0.500

SOUTH CAROLINA
LICENSED PROFESSIONAL ENGINEER
No. 38665
DAVID A LALLONE

Oct 25 2023

Box Truss Cantilever Structure Design

Reference Walpar Job Number : C3546
Reference Design Information Sheet Number : C3 Structure : OH-29 Station : 209+50.04(SB)
State : SC
AASHTO Specification : 6th Edition Fatigue Category : II
Design Wind Velocity (V) : 100 mph

Structure Dimensions

Span (S)	46.08 ft	Truss Hgt (U)	4.00 ft	Truss Depth (Y)	3.50 ft
Post Hgt (H)	26.38 ft	Coeff of Hgt (Kz)	1.00		

Sign Information

Actual Sign Area: 312.50 sq ft

Sign	Load (i)	Lgth (B_i)	Hgt (D_i)	Location (a_i)	Unit wgt	Depth	C_d	Z Ecc	Area	Exit Panel
1	2	13.00	15.50	28.58	7.00		1.14	6.00	202.00	X
2	4	10.00	11.00	41.08	7.00		1.13	6.00	110.50	X

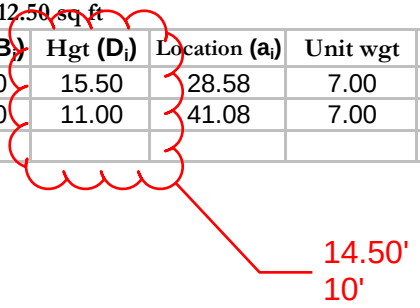

Walkway Information

	Lgth	Location	Width	Unit wgt	Y Ecc
WW1	29.58	31.29	2.54	50	5.25
WW2					

Load Summary Estimate

Weight of truss only	3413 lbs
Weight of truss with signs	5601 lbs
Post weight †	5250 lbs

† includes additonal wgt from base plate



Oct 25 2023

0

Walpar (c) 2014

Box Truss Cantilever Structure Design

Job No : C3546 Structure No : OH-29 Station : 209+50.04(SB)

Loads

Unit wind load on sign(s)/C_d: 29.18 psf Unit wind load on exposed truss: 35.02 psf Unit wgt of truss: 63.99 plf Unit ice wgt on truss: 24.20 plf

Truss Area for Wind Load (A_t): 1.08 sq ft / ft ***All loads in charts in lbs, ft or ft-lbs unless noted**

Truss Load Summary For Actual Sign & WW Condition

	Load (i)	Dead	Wind (W_p & W_h)	Ice
Sign and Truss Loads	1	1413	834	534
	2	2246	6698	921
	3	64	38	24
	4	1413	3646	574
WW Loads	WW1	1479	632	790
Post Reaction (R_1)		6615	11847	2842
Truss Moments (M)		186424	371551	81345

** WW/Equipment Loads are incorporated into Sign and Truss Loads to determine Reactions and Moments.

Post Loads

Dead	Wind	Ice	Group II t_c	Group III t_c
4970	932	669	186	279

Load Combinations for Design Sign Area (Max Condition)

Truss Member Loads	DL	DL +WL	DL+1/2 WL+IL
Truss Chords (Pc)	23303	76382	60011
Vertical Diagonals (Pv)	10077	10077	15913
Horizontal Diagonals (Ph)	3560	9830	5414
Vertical Struts (Psv)	7050	8700	11133
Horizontal Struts (Psh)	3274	5924	5604

Serviceability Requirements

Truss DL Deflection	0.85 in.
Total DL Deflection	3.53 in.
Limit for Deflection	3.69 in.
Camber Used (Cu)	5.76 in.
Permanent Camber (Cp)	4.91 in.
Post Tilt	0.89 in.
Post Deflection Limits	8.51 in.
D^2/400 Limit	5.67 in.
Horizontal WL Deflection	3.78 in.
Horizontal Defl Limits	13.82 in.

	Post Loads					
	M_N	M_{tc}	M_z/Torsion	V_N	V_{tc}	Axial
Group II Comb. 1 (DL+WL)	341142	253834	378910	12910	2556	11585
Group III Comb. 1 (DL+1/2WL+IL)	173695	300338	189455	6520	1278	15096
Group II Comb. 2 (DL+WL)	210712	284132	249244	7798	3834	11585
Group III Comb. 2 (DL+1/2WL+IL)	106186	316623	124622	3964	1917	15096



Oct 25 2023

0

Walpar (c) 2014

Box Truss Cantilever Structure Design

Job No : C3546 Structure No : OH-29 Station : 209+50.04(SB)

Material Information

	Pipe Size (Min Yield)	Unbraced Lgth	CSR Group II	CSR Group III
Truss Chords	4.500 x 0.237 (52 ksi)	8.17 ft	0.77	0.61
Vertical Diagonals	1.660 x 0.140 (52 ksi)	5.72 ft	0.48	0.76
Vertical Struts	1.660 x 0.140 (52 ksi)	4.00 ft	0.56	0.72
Horizontal Diagonals	1.900 x 0.200 (52 ksi)	5.38 ft	0.53	0.29
Horizontal Struts	1.900 x 0.200 (52 ksi)	3.50 ft	0.19	0.18
Post	30.000 x 0.500 (52 ksi)	28.38 ft	0.44	0.31

Structure Detail Information

Truss to Post Connection

Connection Bolt Qty & Size	12 - ¾" ø A325
Connection Plate Weld "A"	¼ fillet
Connection Plate Weld "B"	3/16 fillet
Connection Plate Welds "C"&"D"	3/16 fillet

Post Detail

Maximum Anchor Bolt Pullout	46131 lbs
Anchor Bolt Circle	36 in. Dia
Anchor Bolt Yield	55 ksi
Anchor Bolt Qty & Size	12 - 1.75" ø
Anchor Bolt Length (Embed Used)	4.50 ft (3.5 ft)
Anchor Bolt CSR	0.67
Base Plate Thickness	1.75 in.
Base Plate Weld	5/16 fillet
Gusset Plates at Base	12-½" x 12"

Truss Chord Splices

Maximum Design Load at Splice	92592 lbs
Splice Moment (per in. of circum)	4093 in-lbs
Splice Bolt Circle	7.5 in.
Splice Bolt Qty & Size	4 - 7/8" ø A325
Splice Plate Thickness	0.75 in.
Splice Plate Weld	¼ fillet

ACI 318 App D checked with Min. Req'd Embed 3.04 ft

Sign Hanger Detail

Design hanger spacing 9.00 ft

Sign Hanger U-Bolt type ASTM-A307

SIGN	Max UBL at End	Max Spacing	Hanger U-Bolt	Sign Hanger	Hanger Support
1	4.00 ft	9.00 ft	2 - ½" ø	L5x3x5/16	W6x9
2	4.00 ft	9.00 ft	2 - ½" ø	L5x3x5/16	W6x9

Structure Input (For Foundation Designs)

Sign DL React (DLS)	3.67 k
Truss DL React (DLT)	2.95 k
Post DL React (DLP)	4.97 k
Truss WL React (Wh)	0.87 k
Truss WL React (Wp)	10.93 k
Post WL React (Wv)	0.93 k
Dist. To DLS & Wp (L1)	33.00 ft
Distance To Wh (L2)	23.04 ft
Distance To Rh (H1)	26.38 ft
Distance To Wv (H2)	14.19 ft
Torque at Base (Mt)	378.9 k-ft
Min Ped Wth (PL & PW)	4.50 ft

SOUTH CAROLINA LICENSED PROFESSIONAL ENGINEER
David A Lallone
No. 38665
DAVID A LALLONE

Oct 25 2023

0

C3 - 3 of 8

Walpar (c) 2014

Box Truss Cantilever Structure Design

Job No : C3546 Structure No : OH-29 Station : 209+50.04(SB)

Vibration and Fatigue (Per AASHTO 6th Edition)

Natural Wind Gust Load on Signs/C_d 4.42 psf
Natural Wind Gust Load on Truss 5.30 psf

Truck Induced Gust Load on Truss 16.43 psf
Extent of Truck Induced Gust 12.00 ft
Truss Area for Truck Induced Gust 1.07 sq ft / ft
Location of Center of Truck Induced Gust 40.08 ft

Truss Load Summary for Vibration and Fatigue

Loads (i)	NWG(i)	TIG(i)
1	126	
2	1014	
3	6	18
4	552	210
WW1	299	561
Post Reaction	1998	789
Maximum Moments	62634	30940

Member Forces for Vibration and Fatigue

Truss Members	P_{NWG}	P_{TG}
Truss Chords	8948	3867
Vertical Diagonals	-	564
Horizontal Diagonals	1535	-
Vertical Struts	-	395
Horizontal Struts	999	-

	Post Loads at Base				
	M_N	M_Y	M_z/Torsion	V_N	Axial
Natural Wind	57580	-	62634	2343	-
Truck Induced Gust	-	30940	-	-	789

Vibration and Fatigue Stresses

	NWG (ksi)	TIG (ksi)	Allowable (ksi)
Post/Truss Connection	1.27	0.55	2.60
Truss Vertical Diagonals	-	0.59	1.20
Truss Horizontal Diagonals	0.94	-	1.20
Truss Vertical Struts	-	0.59	1.20
Truss Horizontal Struts	0.94	-	1.20
Post Base Connection	1.06	0.57	7.00
Base Stiffener Termination	2.06	1.11	7.00
Anchor bolts	4.80	2.61	7.00



Oct 25 2023

0

Walpar (c) 2014

Box Truss Cantilever Structure Design

Job No : C3546 Structure No : OH-29 Station : 209+50.04(SB)

Foundation Design

Boring Type	SPT	Boring Designation	G-217		
Major Soil Type	Cohesive	Depth to Water	NA	Surcharge (Frost) Depth	2 ft
Ground Slope	6:1	Consider slope stability?	N		

SOIL TYPES	
01-GP	07-SM
02-GW	08-ML
03-GM	09-MH
04-GC	10-SC
05-SP	11-CL
06-SW	12-CH

Soil Properties

Depth	N Value	γ' (pcf)	Φ (deg)	S_u (lbf/ft^2)	α	β	f_{SN} (lbf/ft^2)	$(N_1)_{60}$	Soil Type
**0 - 4	19	124	30	2375	0.55		1306	38	11
4 - 6	40	145	33	4000	0.55		2200	80	11
6 - 8	27	123	31	3375	0.55		1856	54	09
8 - 13.5	34	134	31	4000	0.55		2200	68	09
13.5 - 18.5	28	125	29	3500	0.55		1925	46	09
18.5 - 20	17	108	27	2125				30	09
20 - 35	17	108	25	2125				18	09

* Soil Type 13 indicates rock layer with N>60 for cohesionless soil or N>40 for cohesive soils

**Top 2.0 ft will not contibute to any load resistance + 1 diameter at bottom will not contribute to frictional load resistance.

Soil Bearing Capacity for Spread Footing Design

Footing width, B	12.00 ft	Total wgt of load, foundation and soil, Pt	190.93 k
Footing length, L	23.00 ft	Normal moment, ML	324.47 ft-k
Eccentricity, e_L	1.70 ft	Transverse moment, Mw	250.79 ft-k
Eccentricity, e_B	1.31 ft	Distance from ground to bottom of footing, d_{min}	4.00 ft
Effective ftg width, B'	9.37 ft	Distance from ground to bottom of footing, D_f	5.00 ft
Effective ftg width, L'	19.60 ft	Distance to ground water from bottom of ftg, z_w	
		Overburden pressure at base of footing, q	0.66 ksf
		Weighted average soil unit weight, γ	131 pcf
Ultimate bearing capacity, q_{ult}	218.54 ksf		
Allowable Bearing Capacity	72.75 ksf		
Bearing Capacity used ***	2.00 ksf		

***Note: Bearing capacities greater than 4.0 ksf will rarely effect spread footing pad size



Oct 25 2023

0

Walpar (c) 2014

Box Truss Cantilever Structure Design

Job No : C3546 Structure No : OH-29 Station : 209+50.04(SB)

Cantilever Spread Footing Design

Material/Soil Specifications and Safety Factors

Concrete f'_c :	3000 psi	Concrete wgt :	150 pcf
Rebar yield f_y :	60000 psi	Rebar F_s :	24000 psi
Soil Bearing Capacity :	2000 psf	Soil unit wgt :	110 pcf

Load Safety Factor[1] : 1.15

Loads and Locations From Structure

Sign DL React (DLS)	3.67 k	Distance to DLS & Wp (L1)	33.00 ft
Truss DL React (DLT)	2.95 k	Distance to Wh (L2)	23.04 ft
Post DL React (DLP)	4.97 k	Distance to Rh (H1)	26.38 ft
Truss WL React (Wh)	0.87 k	Distance to Wv (H2)	14.19 ft
Truss WL React (Wp)	10.93 k	Torque at Base (M_t)	378.9 ft-k
Post WL React (Wv)	0.93 k	Min Ped Width (PL/PW)	4.50 ft

Loads at Top of Pedestal from Structure

Axial load (P)	11.59 k		
Moment (ML)	324.47 ft-k	Moment (Mw)	250.79 ft-k
Shear (VL)	12.73 k	Shear (Vw)	2.43 k

Final Spread Footing Design Sizes

Pad Length (L)	23.00 ft	Pedestal Width/Length	4.50 ft (PW/PL)
Pad Width (W)	12.00 ft	Pedestal Projection	1.00 ft (PE)
Pad Thickness (T)	2.00 ft	Ground line to Top of Pad	3.00 ft (PT)

Reinforcement

Pad	Pedestal
Top Each Way - #4 Bars @ 12" o.c.	40 - #8 Vertical Bars Equally Spaced
X Direction - 12 - #6 Bars @ 12" o.c.	4 - #5 Ties @ 11.25" o.c.
Y Direction - 23 - #4 Bars @ 12" o.c.	

Serviceability	Quantities
1.79% of footing in uplift	1722 lbs of reinforcement
Safety factor against overturning = 139.09	23.44 cyd of concrete

Uncracked Section Calculations

Wgt of soil above pad (Ps)	84.40 k		
Wgt of concrete (Pc)	94.95 k	Total Area (A)	276.00 ft²
Total Load (Pt)	190.93 k		
X	11.50 ft	Y	6.00 ft
Ix	3312.00 ft⁴	Iy	12167.00 ft⁴
Mx	305.18 k-ft	My	461.00 k-ft

Corner Stresses [Factored loads[1] (unfactored loads)]

F1	1.68 ksf (1.55 ksf)
F2	0.57 ksf (0.59 ksf)
F3	-0.30 ksf (-0.17 ksf)
F4	0.81 ksf (0.79 ksf)

Cracked Section Calculations [Factored loads[1] (unfactored loads)]

A1	184.01 ft² (217.23 ft²)	L1	15.33 ft (18.10 ft)	W1	12.00 ft (12.00 ft)
A2	67.97 ft² (48.92 ft²)	L2	7.67 ft (4.90 ft)	W2	8.87 ft (9.99 ft)
A3	12.01 ft² (4.93 ft²)	L3	7.67 ft (4.90 ft)	W3	3.13 ft (2.01 ft)
A'	263.99 ft² (271.07 ft²)				
Xc	0.41 ft (0.18 ft)	X1	3.83 ft (2.45 ft)	Y1	0.00 ft (0.00 ft)
Yc	0.23 ft (0.10 ft)	X2	-7.67 ft (-9.05 ft)	Y2	1.57 ft (1.01 ft)
		X3	-6.39 ft (-8.23 ft)	Y3	-3.91 ft (-4.66 ft)

Ixc	2966.82 ft⁴ (3162.20 ft⁴)
Iyc	11153.53 ft⁴ (11678.04 ft⁴)
Ixcyc	-548.53 ft⁴ (-262.52 ft⁴)
Mxc	262.14 ft-k (246.88 ft-k)
Myc	383.31 ft-k (366.62 ft-k)
X'	11.91 ft (11.68 ft)
Y'	6.23 ft (6.10 ft)

Corner Stresses [Factored loads[1] (unfactored loads)]

F1	1.75 ksf (1.57 ksf)
F2	0.60 ksf (0.60 ksf)
F3	-0.30 ksf (-0.16 ksf)
F4	0.85 ksf (0.81 ksf)



Oct 25 2023

0

Walpar (c) 2014

Box Truss Cantilever Structure Design

Job No : C3546 Structure No : OH-29 Station : 209+50.04(SB)

Cantilever Spread Footing Design (cont.)

Moment and Shear Calculation Results

L_{x1}	6.00 ft	W_{x1}	0.00 ft	S_{y1}	0.96 ksf	S_{x1}	1.30 ksf
L_{x2}	3.92 ft	W_{x2}	2.08 ft	S_{y2}	0.88 ksf	S_{x2}	1.10 ksf
L_{y1}	5.50 ft	W_{y1}	6.00 ft	S_{y3}	0.81 ksf	S_{x3}	0.94 ksf
L_{y2}	2.08 ft	W_{y2}	3.92 ft	Pcs	0.63 ksf		
				DTS_y	4.42 k	DTS_x	1.50 k
				M_{YY}	18.06 ft-k	M_{XX}	3.85 ft-k

Reinforcement Calculations

f_{cr} : 1596 psi v_{cr} : 69 psi n : 9.29
b : 12.00 in d : 20.00 in x : 7.50 in

About Y Axis		About X Axis	
p :	0.0018	p :	0.0018
k :	0.17	k :	0.17
j :	0.94	j :	0.94
f_{ca} :	573 psi	f_{ca} :	122 psi
v_{ca} :	20 psi	v_{ca} :	7 psi
Mt :	395660 in-lb	Mt :	84315 in-lb
ld_r :	44.73 in	ld_r :	28.18 in
ld_a :	108.00 in	ld_a :	42.00 in
ld_{min} :	41.08 in	ld_{min} :	27.39 in
A_{sr} :	0.36 in²	A_{sr} :	0.08 in²
A_s Used :	0.44 in²	A_s Used :	0.20 in²

Torque Calculations

P_1 :	46.00 k	P_{1P} :	13.50 k
P_2 :	24.00 k	P_{2P} :	13.50 k
TQ_m :	489.17 ft-k	T_u :	439.93 ft-k
TQ_a :	378.91 ft-k	T_{uo} :	135.98 ft-k
		A_{lr} :	5.29 in²
		A_{la} :	6.32 in²

Factor of safety against sliding (μ=0.40) : 6.00

Pedestal Calculations

V_1 : 12963 lbs V_2 : 0 lbs V_t : 0 lbs

About Y Axis		About X Axis	
C_x :	27.00 in	C_y :	27.00 in
G_x :	46.00 in	G_y :	46.00 in
f_a :	3.97 psi	fa :	6666 psi
F_a :	1596 psi	Fa :	26334 psi
f_{bx} :	97 psi	f_{by} :	139 psi
F_{bx} :	1596 psi	F_{by} :	1596 psi
M_x :	260514 ft-lb	M_y :	375406 ft-lb
M_{ox} :	869980 ft-lb	M_{oy} :	869980 ft-lb
I_x :	874216 in⁴	I_y :	874216 in⁴
A_g :	2916 in²	A_{sm} :	29.16 in²
A_{st} :	25.28 in²	A_s :	7.11 in²
QTY :	40	A_b :	0.79 in²
CSR :	0.21	CSM :	0.73



Oct 25 2023

0

C3 - 7 of 8

Walpar (c) 2014

Box Truss Cantilever Structure Design

Job No : C3546 Structure No : OH-29 Station : 209+50.04(SB)

Cantilever Cylindrical Footing Design

Material/Soil Specifications and Safety Factors

Concrete f '$_c$:	3000 psi	Concrete wgt :	150 pcf
Rebar yield f_y :	60000 psi	Min safety factor for torsion :	1.13
Reinforcement Clear :	4 in	Min safety factor for lateral load :	2.86

Loads and Locations From Structure

Sign DL React (DLS)	3.67 k	Dist. To DLS & Wp (L1)	33.00 ft
Truss DL React (DLT)	2.95 k	Distance To Wh (L2)	23.04 ft
Post DL React (DLP)	4.97 k	Distance To Rh (H1)	26.38 ft
Truss WL React (Wh)	0.87 k	Distance To Wv (H2)	14.19 ft
Truss WL React (Wp)	10.93 k	Footing Projection (H3)	1.00 ft
Post WL React (Wv)	0.93 k	Torque at Base (M_t)	378.9 ft-k

Loads at Top of Cylinder from Structure

Dead Load Moment (MDL)	256.12 ft-k	Effective height (Heff)	25.48 ft
Wind Load Moment (MWL)	324.47 ft-k	Lateral load from MDL (PDL)	2.55 k
Resultant Moment (MR)	423.87 ft-k	Resultant Lateral Load (PRL)	16.63 k
Wind Load Shear at Base (PWL)	12.73 k	Total Dead Load at Column Base (TDL)	11.59 k
Transverse Load (t_c)	2.55 k		

Final Cylindrical Footing Design Sizes

Req'd A_s	13.65 in²	Rebar Cage Dia (D1)	43.48 in
1% Cyl Area Min A_m	22.90 in²	Vertical bar spacing	7.19 in
Reinf Area Provided A_p	24.13 in²		

USE 54 in DIA x 18'-0 CYLINDER
w/ 19- # 10 VERT. BARS & 20 - #5 HOOPS
Extra Hoop 3 inches below top hoop

Serviceability

Calculated torsional / axial safety factors = 1.84 / 15.19
Calculated lateral safety factor = 13.42

Quantities

1696 lbs of reinforcement
10.60 cyd of concrete

Torsion Calculation Results
(from Beta Method)

Cylinder Embedment	12.50 ft
Axial load	11.59 k
Torsional load	378.91 ft-k
Weight of shaft	42.94 k
Max Allow Torque on reinf CYL	417.92 ft-k
Side Resist. Capacity	291.6 k
Allowable side resist. torque	656.05 ft-k
Avg Su for Tip Resist. (ksf)	3.75
Tip Resist. Capacity	536.77 k
Allowable Tip Resist. Torque	41.5 ft-k
	0.0 ft-k
Total Allowable Torque	697.5 ft-k
Calc'd Torsional safety factor	1.84

Lateral Load Calculation Results
(from Brom's Method)

Soil friction angle Φ	31.4 deg
Soil unit weight γ	131 pcf
AVG $(N_1)_{60}$ over req'd dp (BPF)	84
Lateral load from structure	16.6 k
Moment from structure	423.9 ft-k
Rankine Passive Pressure Coeff. K_P	11.06
Ultimate soil resistance P_{ult}	1462 k
Allowable soil resistance P_{max}	680 k
Ultimate soil mom cap M_{ult}	6356 ft-k
Allowable soil mom cap M_{max}	2956 ft-k
Ground line moment	440 ft-k
Dist GL to 0 shear pt in CYL	3.30 ft
Maximum moment in shaft	474 ft-k



Oct 25 2023

0

C3 - 8 of 8

Walpar (c) 2014

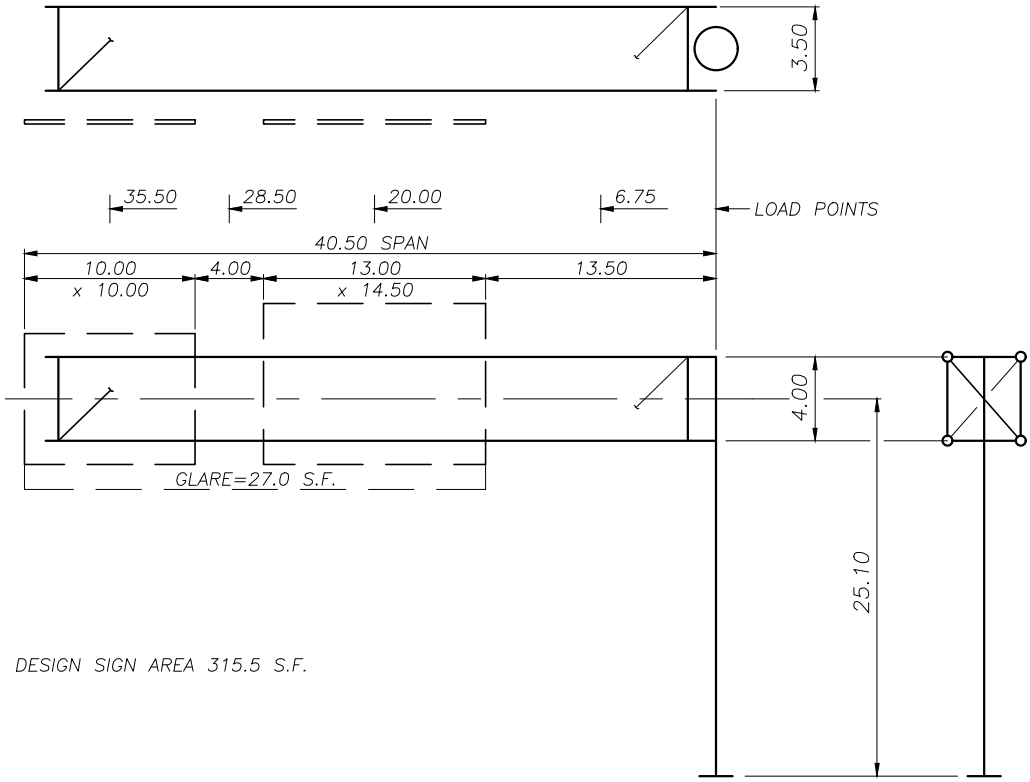

DESIGN SIGN AREA 315.5 S.F.

8 – 2.00"ø ANCHOR BOLTS

STR NO: OH–30
STA NO: 38+93.47(SB)

CHORDS	3.500 x 0.216
VERTICAL DIAGONALS	1.660 x 0.140
VERTICAL STRUTS	1.660 x 0.140
HORIZ STRUTS & DIAG'S	1.900 x 0.200
POST	30.000 x 0.375

SOUTH CAROLINA LICENSED PROFESSIONAL ENGINEER
No. 38665
DAVID A LALLONE

Oct 25 2023

Box Truss Cantilever Structure Design

Reference Walpar Job Number : C3546
Reference Design Information Sheet Number : C4 Structure : OH-30 Station : 38+93.47(SB)
State : SC
AASHTO Specification : 6th Edition Fatigue Category : II
Design Wind Velocity (V) : 100 mph

Structure Dimensions

Span (S)	40.50 ft	Truss Hgt (U)	4.00 ft	Truss Depth (Y)	3.50 ft
Post Hgt (H)	25.10 ft	Coeff of Hgt (Kz)	1.00		

Sign Information

Actual Sign Area: 315.50 sq ft

Sign	Load (i)	Lgth (B_i)	Hgt (D_i)	Location (a_i)	Unit wgt	Depth	C_d	Z Ecc	Area	Exit Panel
1	2	13.00	15.50	20.00	7.00		1.13	6.00	201.50	
2	4	10.00	11.00	35.50	7.00		1.13	6.00	114.00	X

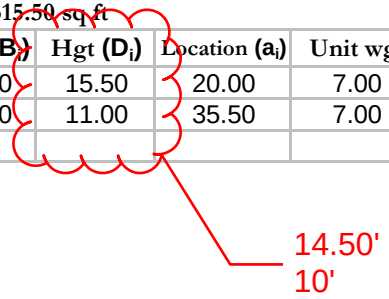

Walkway Information

	Lgth	Location	Width	Unit wgt	Y Ecc
WW1	38.00	27.50	2.54	55	4.89
WW2					

Load Summary Estimate

Weight of truss only	2428 lbs
Weight of truss with signs	4637 lbs
Post weight †	3949 lbs

† includes additonal wgt from base plate



Oct 25 2023

0

Walpar (c) 2014

Box Truss Cantilever Structure Design

Job No : C3546 Structure No : OH-30 Station : 38+93.47(SB)

Loads

Unit wind load on sign(s)/C_d: 29.18 psf Unit wind load on exposed truss: 35.02 psf Unit wgt of truss: 51.98 plf Unit ice wgt on truss: 21.43 plf

Truss Area for Wind Load (A_t): 0.92 sq ft / ft ***All loads in charts in lbs, ft or ft-lbs unless noted**

Truss Load Summary For Actual Sign & WW Condition

	Load (i)	Dead	Wind (W_p & W_h)	Ice
Sign and Truss Loads	1	702	433	289
	2	2086	6665	883
	3	208	128	86
	4	1318	3773	556
WW Loads	WW1	2090	812	1014
Post Reaction (R_1)		6404	11812	2828
Truss Moments (M)		156648	296148	69692

** WW/Equipment Loads are incorporated into Sign and Truss Loads to determine Reactions and Moments.

Post Loads

Dead	Wind	Ice	Group II t_c	Group III t_c
3716	890	639	178	267

Load Combinations for Design Sign Area (Max Condition)

Truss Member Loads	DL	DL +WL	DL+1/2 WL+IL
Truss Chords (Pc)	19581	61888	49446
Vertical Diagonals (Pv)	10912	10912	16896
Horizontal Diagonals (Ph)	4216	9951	5615
Vertical Struts (Psv)	7634	9049	11820
Horizontal Struts (Psh)	3878	5906	6304

Serviceability Requirements

Truss DL Deflection	0.77 in.
Total DL Deflection	3.25 in.
Limit for Deflection	3.24 in.
Camber Used (Cu)	5.06 in.
Permanent Camber (Cp)	4.30 in.
Post Tilt	0.90 in.
Post Deflection Limits	8.13 in.
D^2/400 Limit	5.67 in.
Horizontal WL Deflection	3.37 in.
Horizontal Defl Limits	12.15 in.

	Post Loads					
	M_N	M_{tc}	M_z/Torsion	V_N	V_{tc}	Axial
Group II Comb. 1 (DL+WL)	324404	220420	302013	12836	2540	10120
Group III Comb. 1 (DL+1/2WL+IL)	164950	257198	151007	6485	1270	13587
Group II Comb. 2 (DL+WL)	200192	249222	198662	7755	3810	10120
Group III Comb. 2 (DL+1/2WL+IL)	100901	272627	99331	3945	1905	13587



Oct 25 2023

0

C4 - 2 of 8

Walpar (c) 2014

Box Truss Cantilever Structure Design

Job No : C3546 Structure No : OH-30 Station : 38+93.47(SB)

Material Information

	Pipe Size (Min Yield)	Unbraced Lgth	CSR Group II	CSR Group III
Truss Chords	3.500 x 0.216 (52 ksi)	8.17 ft	0.89	0.71
Vertical Diagonals	1.660 x 0.140 (52 ksi)	5.72 ft	0.52	0.81
Vertical Struts	1.660 x 0.140 (52 ksi)	4.00 ft	0.58	0.76
Horizontal Diagonals	1.900 x 0.200 (52 ksi)	5.38 ft	0.54	0.30
Horizontal Struts	1.900 x 0.200 (52 ksi)	3.50 ft	0.19	0.21
Post	30.000 x 0.375 (52 ksi)	27.10 ft	0.55	0.37

Structure Detail Information

Truss to Post Connection

Connection Bolt Qty & Size	10 - ¾" ø A325
Connection Plate Weld "A"	¼ fillet
Connection Plate Weld "B"	3/16 fillet
Connection Plate Welds "C"&"D"	3/16 fillet

Post Detail

Maximum Anchor Bolt Pullout	63910 lbs		
Anchor Bolt Circle	36 in. Dia		
Anchor Bolt Yield	55 ksi		
Anchor Bolt Qty & Size	8 - 2" ø	ACI 318 App D checked	
Anchor Bolt Length (Embed Used)	4.50 ft (3.5 ft)	with Min. Req'd Embed	2.31 ft
Anchor Bolt CSR	0.66		
Base Plate Thickness	2 in.		
Base Plate Weld	5/16 fillet		
Gusset Plates at Base	8-¾" x 12"		

Sign Hanger Detail

Design hanger spacing 9.00 ft

Sign Hanger U-Bolt type ASTM-A307

SIGN	Max UBL at End	Max Spacing	Hanger U-Bolt	Sign Hanger	Hanger Support
1	4.00 ft	9.00 ft	2 - ½" ø	L5x3x5/16	W6x9
2	4.00 ft	9.00 ft	2 - ½" ø	L5x3x5/16	W6x9

Structure Input (For Foundation Designs)

Sign DL React (DLS)	4.30 k
Truss DL React (DLT)	2.11 k
Post DL React (DLP)	3.72 k
Truss WL React (Wh)	0.56 k
Truss WL React (Wp)	11.07 k
Post WL React (Wv)	0.89 k
Dist. To DLS & Wp (L1)	25.60 ft
Distance To Wh (L2)	20.25 ft
Distance To Rh (H1)	25.10 ft
Distance To Wv (H2)	13.55 ft
Torque at Base (Mt)	302.0 k-ft
Min Ped Wth (PL & PW)	4.50 ft

SOUTH CAROLINA LICENSED PROFESSIONAL ENGINEER
No. 38665
DAVID A LALLONE

Oct 25 2023

0

C4 - 3 of 8

Walpar (c) 2014

Box Truss Cantilever Structure Design

Job No : C3546 Structure No : OH-30 Station : 38+93.47(SB)

Vibration and Fatigue (Per AASHTO 6th Edition)

Natural Wind Gust Load on Signs/C_d 4.42 psf
Natural Wind Gust Load on Truss 5.30 psf

Truck Induced Gust Load on Truss 16.37 psf
Extent of Truck Induced Gust 12.00 ft
Truss Area for Truck Induced Gust 0.91 sq ft / ft
Location of Center of Truck Induced Gust 34.50 ft

Truss Load Summary for Vibration and Fatigue

Loads (i)	NWG(i)	TIG(i)
1	66	
2	1009	
3	19	
4	571	178
WW1	384	842
Post Reaction	2050	1020
Maximum Moments	52034	35203

Member Forces for Vibration and Fatigue

Truss Members	P_{NWG}	P_{TG}
Truss Chords	7433	4400
Vertical Diagonals	-	729
Horizontal Diagonals	1576	-
Vertical Struts	-	510
Horizontal Struts	1025	-

	Post Loads at Base				
	M_N	M_Y	M_z/Torsion	V_N	Axial
Natural Wind	55929	-	52034	2379	-
Truck Induced Gust	-	35203	-	-	1020

Vibration and Fatigue Stresses

	NWG (ksi)	TIG (ksi)	Allowable (ksi)
Post/Truss Connection	1.32	0.78	2.60
Truss Vertical Diagonals	-	0.76	1.20
Truss Horizontal Diagonals	0.96	-	1.20
Truss Vertical Struts	-	0.76	1.20
Truss Horizontal Struts	0.96	-	1.20
Post Base Connection	1.18	0.74	7.00
Base Stiffener Termination	2.63	1.66	7.00
Anchor bolts	6.10	3.91	7.00

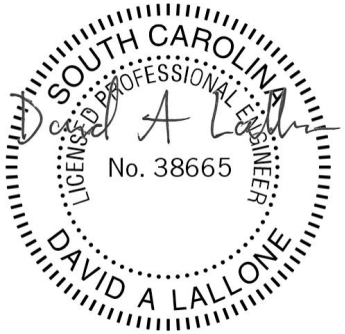

Oct 25 2023

0

Walpar (c) 2014

Box Truss Cantilever Structure Design

Job No : C3546 Structure No : OH-30 Station : 38+93.47(SB)

Foundation Design

Boring Type SPT Boring Designation G-217
Major Soil Type Cohesive Depth to Water NA Surcharge (Frost) Depth 2 ft
Ground Slope 4:1 Consider slope stability? Y

SOIL TYPES	
01-GP	07-SM
02-GW	08-ML
03-GM	09-MH
04-GC	10-SC
05-SP	11-CL
06-SW	12-CH

Soil Properties

Depth	N Value	γ' (pcf)	Φ (deg)	S_u (lbf/ft^2)	α	β	f_{SN} (lbf/ft^2)	$(N_1)_{60}$	Soil Type
**0 - 4	19	124	30	2375	0.55		1306	38	11
4 - 6	40	145	33	4000	0.55		2200	80	11
6 - 8	27	123	31	3375	0.55		1856	54	09
8 - 13.5	34	134	31	4000	0.55		2200	68	09
13.5 - 18.5	28	125	29	3500	0.55		1925	46	09
18.5 - 20	17	108	27	2125				30	09
20 - 35	17	108	25	2125				18	09

* Soil Type 13 indicates rock layer with N>60 for cohesionless soil or N>40 for cohesive soils
**Top 2.0 ft will not contibute to any load resistance + 1 diameter at bottom will not contribute to frictional load resistance.

Soil Bearing Capacity for Spread Footing Design

Footing width, B 11.00 ft
Footing length, L 21.00 ft
Eccentricity, e_L 2.11 ft
Eccentricity, e_B 1.46 ft
Effective ftg width, B' 8.07 ft
Effective ftg width, L' 16.77 ft

Total wgt of load, foundation and soil, Pt 143.79 k
Normal moment, ML 304.03 ft-k
Transverse moment, Mw 210.47 ft-k
Distance from ground to bottom of footing, d_{min} 3.13 ft
Distance from ground to bottom of footing, D_f 4.50 ft
Distance to ground water from bottom of ftg, z_w
Overburden pressure at base of footing, q 0.59 ksf
Weighted average soil unit weight, γ 132 pcf

Ultimate bearing capacity, q_{ult} 200.53 ksf
Allowable Bearing Capacity 66.75 ksf
Bearing Capacity used *** 2.00 ksf

***Note: Bearing capacities greater than 4.0 ksf will rarely effect spread footing pad size



Oct 25 2023

0

Walpar (c) 2014

Box Truss Cantilever Structure Design

Job No : C3546 Structure No : OH-30 Station : 38+93.47(SB)

Cantilever Spread Footing Design

Material/Soil Specifications and Safety Factors

Concrete f'_c :	3000 psi	Concrete wgt :	150 pcf
Rebar yield f_y :	60000 psi	Rebar F_s :	24000 psi
Soil Bearing Capacity :	2000 psf	Soil unit wgt :	110 pcf

Load Safety Factor[1] : 1.15

Loads and Locations From Structure

Sign DL React (DLS)	4.30 k	Distance to DLS & Wp (L1)	25.60 ft
Truss DL React (DLT)	2.11 k	Distance to Wh (L2)	20.25 ft
Post DL React (DLP)	3.72 k	Distance to Rh (H1)	25.10 ft
Truss WL React (Wh)	0.56 k	Distance to Wv (H2)	13.55 ft
Truss WL React (Wp)	11.07 k	Torque at Base (M_t)	302.0 ft-k
Post WL React (Wv)	0.89 k	Min Ped Width (PL/PW)	4.50 ft

Loads at Top of Pedestal from Structure

Axial load (P)	10.12 k		
Moment (ML)	304.03 ft-k	Moment (Mw)	210.47 ft-k
Shear (VL)	12.52 k	Shear (Vw)	2.38 k

Final Spread Footing Design Sizes

Pad Length (L)	21.00 ft	Pedestal Width/Length	4.50 ft (PW/PL)
Pad Width (W)	11.00 ft	Pedestal Projection	1.00 ft (PE)
Pad Thickness (T)	1.50 ft	Ground line to Top of Pad	3.00 ft (PT)

Reinforcement

Pad	Pedestal
Top Each Way - #4 Bars @ 12" o.c.	40 - #8 Vertical Bars Equally Spaced
X Direction - 11 - #8 Bars @ 12" o.c.	4 - #5 Ties @ 11.25" o.c.
Y Direction - 21 - #4 Bars @ 12" o.c.	

Serviceability	Quantities
6.87% of footing in uplift	1777 lbs of reinforcement
Safety factor against overturning = 115.99	15.83 cyd of concrete

Uncracked Section Calculations

Wgt of soil above pad (Ps)	69.55 k		
Wgt of concrete (Pc)	64.13 k	Total Area (A)	231.00 ft²
Total Load (Pt)	143.79 k		
X	10.50 ft	Y	5.50 ft
Ix	2329.25 ft⁴	Iy	8489.25 ft⁴
Mx	257.13 k-ft	My	428.82 k-ft

Corner Stresses [Factored loads[1] (unfactored loads)]

F1	1.76 ksf (1.61 ksf)
F2	0.55 ksf (0.56 ksf)
F3	-0.52 ksf (-0.37 ksf)
F4	0.70 ksf (0.69 ksf)

Cracked Section Calculations [Factored loads[1] (unfactored loads)]

A1	111.80 ft² (138.40 ft²)	L1	10.16 ft (12.58 ft)	W1	11.00 ft (11.00 ft)
A2	68.01 ft² (60.85 ft²)	L2	10.84 ft (8.42 ft)	W2	6.28 ft (7.23 ft)
A3	25.60 ft² (15.88 ft²)	L3	10.84 ft (8.42 ft)	W3	4.72 ft (3.77 ft)
A'	205.40 ft² (215.12 ft²)				
Xc	0.86 ft (0.57 ft)	X1	5.42 ft (4.21 ft)	Y1	0.00 ft (0.00 ft)
Yc	0.49 ft (0.31 ft)	X2	-5.08 ft (-6.29 ft)	Y2	2.36 ft (1.89 ft)
		X3	-3.28 ft (-4.89 ft)	Y3	-2.35 ft (-2.99 ft)
Ixc	1751.81 ft⁴ (1961.55 ft⁴)				
Iyc	7058.78 ft⁴ (7465.78 ft⁴)				
Ixcyc	-741.87 ft⁴ (-542.51 ft⁴)				
Mxc	186.79 ft-k (178.56 ft-k)				
Myc	305.40 ft-k (291.23 ft-k)				
X'	11.36 ft (11.07 ft)				
Y'	5.99 ft (5.81 ft)				

Corner Stresses [Factored loads[1] (unfactored loads)]

F1	2.02 ksf (1.73 ksf)
F2	0.58 ksf (0.59 ksf)
F3	-0.62 ksf (-0.39 ksf)
F4	0.82 ksf (0.75 ksf)



Oct 25 2023

0

Walpar (c) 2014

Box Truss Cantilever Structure Design

Job No : C3546 Structure No : OH-30 Station : 38+93.47(SB)

Cantilever Spread Footing Design (cont.)

Moment and Shear Calculation Results

L_{x1}	5.50 ft	W_{x1}	0.00 ft	S_{y1}	1.01 ksf	S_{x1}	1.42 ksf
L_{x2}	3.42 ft	W_{x2}	2.08 ft	S_{y2}	0.89 ksf	S_{x2}	1.15 ksf
L_{y1}	5.00 ft	W_{y1}	5.50 ft	S_{y3}	0.83 ksf	S_{x3}	0.99 ksf
L_{y2}	2.08 ft	W_{y2}	3.42 ft	Pcs	0.56 ksf		
				DTS_y	5.92 k	DTS_x	1.98 k
				M_{YY}	19.97 ft-k	M_{XX}	3.82 ft-k

Reinforcement Calculations

f_{cr} : 1596 psi v_{cr} : 69 psi n : 9.29

b : 12.00 in d : 14.00 in x : 5.25 in

About Y Axis		About X Axis	
p :	0.0036	p :	0.0018
k :	0.23	k :	0.17
j :	0.92	j :	0.94
f_{ca} :	965 psi	f_{ca} :	247 psi
v_{ca} :	38 psi	v_{ca} :	12 psi
Mt :	437620 in-lb	Mt :	83622 in-lb
ld_r :	36.94 in	ld_r :	21.13 in
ld_a :	96.00 in	ld_a :	36.00 in
ld_{min} :	54.77 in	ld_{min} :	27.39 in
A_{sr} :	0.58 in²	A_{sr} :	0.11 in²
A_s Used :	0.79 in²	A_s Used :	0.20 in²

Torque Calculations

P_1 :	31.50 k	P_{1P} :	13.50 k
P_2 :	16.50 k	P_{2P} :	13.50 k
TQ_m :	321.50 ft-k	T_u :	339.97 ft-k
TQ_a :	302.01 ft-k	T_{uo} :	135.82 ft-k
		A_{lr} :	5.29 in²
		A_{la} :	6.32 in²

Factor of safety against sliding (μ=0.40) : 4.59

Pedestal Calculations

V_1 : 12745 lbs V_2 : 0 lbs V_t : 0 lbs

About Y Axis		About X Axis	
C_x :	27.00 in	C_y :	27.00 in
G_x :	46.00 in	G_y :	46.00 in
f_a :	3.47 psi	fa :	5390 psi
F_a :	1596 psi	Fa :	26334 psi
f_{bx} :	82 psi	f_{by} :	131 psi
F_{bx} :	1596 psi	F_{by} :	1596 psi
M_x :	220011 ft-lb	M_y :	354106 ft-lb
M_{ox} :	869980 ft-lb	M_{oy} :	869980 ft-lb
I_x :	874216 in⁴	I_y :	874216 in⁴
A_g :	2916 in²	A_{sm} :	29.16 in²
A_{st} :	25.28 in²	A_s :	7.11 in²
QTY :	40	A_b :	0.79 in²
CSR :	0.18	CSM :	0.66



Oct 25 2023

0

Walpar (c) 2014

Box Truss Cantilever Structure Design

Job No : C3546 Structure No : OH-30 Station : 38+93.47(SB)

Cantilever Cylindrical Footing Design

Material/Soil Specifications and Safety Factors

Concrete f '$_c$:	3000 psi	Concrete wgt :	150 pcf
Rebar yield f_y :	60000 psi	Min safety factor for torsion :	1.13
Reinforcement Clear :	4 in	Min safety factor for lateral load :	2.86

Loads and Locations From Structure

Sign DL React (DLS)	4.30 k	Dist. To DLS & Wp (L1)	25.60 ft
Truss DL React (DLT)	2.11 k	Distance To Wh (L2)	20.25 ft
Post DL React (DLP)	3.72 k	Distance To Rh (H1)	25.10 ft
Truss WL React (Wh)	0.56 k	Distance To Wv (H2)	13.55 ft
Truss WL React (Wp)	11.07 k	Footing Projection (H3)	1.00 ft
Post WL React (Wv)	0.89 k	Torque at Base (M_t)	302.0 ft-k

Loads at Top of Cylinder from Structure

Dead Load Moment (MDL)	215.54 ft-k	Effective height (Heff)	24.28 ft
Wind Load Moment (MWL)	304.03 ft-k	Lateral load from MDL (PDL)	2.50 k
Resultant Moment (MR)	391.05 ft-k	Resultant Lateral Load (PRL)	16.10 k
Wind Load Shear at Base (PWL)	12.52 k	Total Dead Load at Column Base (TDL)	10.12 k
Transverse Load (t_c)	2.50 k		

Final Cylindrical Footing Design Sizes

Req'd A_s	12.66 in²	Rebar Cage Dia (D1)	43.48 in
1% Cyl Area Min A_m	22.90 in²	Vertical bar spacing	7.19 in
Reinf Area Provided A_p	24.13 in²		

USE 54 in DIA x 17'-0 CYLINDER
w/ 19- # 10 VERT. BARS & 19 - #5 HOOPS
Extra Hoop 3 inches below top hoop

Serviceability

Calculated torsional / axial safety factors = 2.07 / 15.73
Calculated lateral safety factor = 12.09

Quantities

1601 lbs of reinforcement
10.01 cyd of concrete

Torsion Calculation Results (from Beta Method)

Cylinder Embedment	11.50 ft
Axial load	10.12 k
Torsional load	302.01 ft-k
Weight of shaft	40.56 k
Max Allow Torque on reinf CYL	418.62 ft-k
Side Resist. Capacity	260.5 k
Allowable side resist. torque	586.07 ft-k
Avg Su for Tip Resist. (ksf)	3.75
Tip Resist. Capacity	536.77 k
Allowable Tip Resist. Torque	38.6 ft-k
	0.0 ft-k
Total Allowable Torque	624.6 ft-k
Calc'd Torsional safety factor	2.07

Lateral Load Calculation Results (from Brom's Method)

Soil friction angle Φ	31.4 deg
Soil unit weight γ	132 pcf
AVG $(N_1)_{60}$ over req'd dp (BPF)	88
Lateral load from structure	16.1 k
Moment from structure	391.1 ft-k
Rankine Passive Pressure Coeff. K_P	11.75
Ultimate soil resistance P_{ult}	1323 k
Allowable soil resistance P_{max}	615 k
Ultimate soil mom cap M_{ult}	5313 ft-k
Allowable soil mom cap M_{max}	2471 ft-k
Ground line moment	407 ft-k
Dist GL to 0 shear pt in CYL	3.24 ft
Maximum moment in shaft	439 ft-k

SOUTH CAROLINA LICENSED PROFESSIONAL ENGINEER
David A Lallone
No. 38665
DAVID A LALLONE

Oct 25 2023

0

C4 - 8 of 8

Walpar (c) 2014

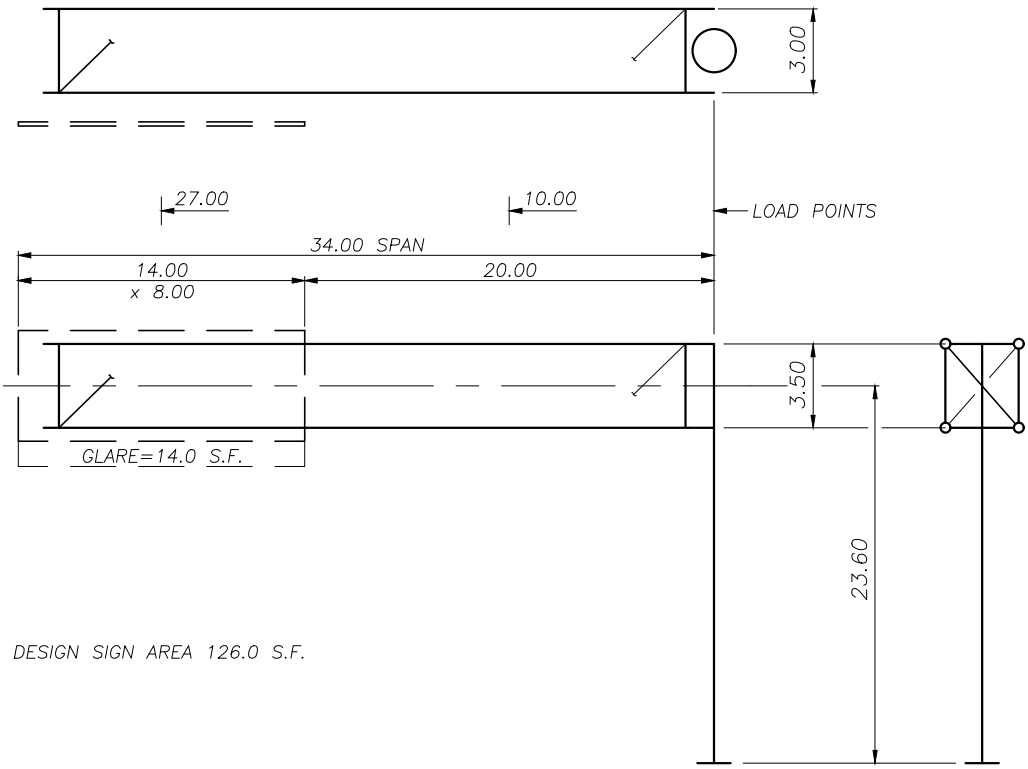

DESIGN SIGN AREA 126.0 S.F.

8 – 1.50"ø ANCHOR BOLTS

STR NO: OH–31A
STA NO: 51+00(EB)

CHORDS	3.500 x 0.188
VERTICAL DIAGONALS	1.315 x 0.133
VERTICAL STRUTS	1.315 x 0.133
HORIZ STRUTS & DIAG'S	1.660 x 0.140
POST	24.000 x 0.375

SOUTH CAROLINA
LICENSED PROFESSIONAL ENGINEER
No. 38665
DAVID A LALLONE

Oct 25 2023

Box Truss Cantilever Structure Design

Reference Walpar Job Number : C3546
Reference Design Information Sheet Number : C5 Structure : OH-31A Station : 51+00(EB)
State : SC
AASHTO Specification : 6th Edition Fatigue Category : II
Design Wind Velocity (V) : 100 mph

Structure Dimensions

Span (S) 34.00 ft Truss Hgt (U) 3.50 ft Truss Depth (Y) 3.00 ft
Post Hgt (H) 23.60 ft Coeff of Hgt (Kz) 0.94

Sign Information

Actual Sign Area: 126.00 sq ft

Z Ecc to bottom of glare screen

Sign	Load (i)	Lgth (B_i)	Hgt (D_i)	Location (a_i)	Unit wgt	Depth	C_d	Z Ecc	Area	Exit Panel
1	2	14.00	8.00	27.00	7.00		1.17	5.00	126.00	

Walkway Information

	Lgth	Location	Width	Unit wgt	Y Ecc
WW1	18.00	25.00	2.54	60	4.95
WW2					

Load Summary Estimate

Weight of truss only 1623 lbs
Weight of truss with signs 2505 lbs
Post weight † 2887 lbs

† includes additonal wgt from base plate

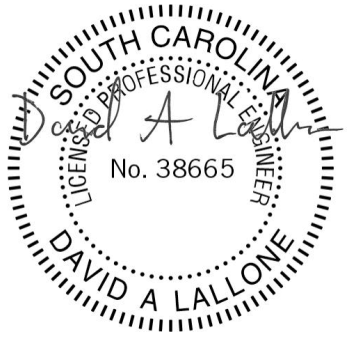

Oct 25 2023

0

C5 - 1 of 8

Walpar (c) 2014

Box Truss Cantilever Structure Design

Job No : C3546 Structure No : OH-31A Station : 51+00(EB)

Loads

Unit wind load on sign(s)/C_d: 27.43 psf Unit wind load on exposed truss: 32.92 psf Unit wgt of truss: 40.75 plf Unit ice wgt on truss: 19.30 plf

Truss Area for Wind Load (A_t): 0.84 sq ft / ft ***All loads in charts in lbs, ft or ft-lbs unless noted**

Truss Load Summary For Actual Sign & WW Condition

	Load (i)	Dead	Wind (W_p & W_h)	Ice
Sign and Truss Loads	1	815	550	386
	2	1453	4053	648
WW Loads	WW1	1080	361	480
Post Reaction (R_1)		3348	4964	1514
Truss Moments (M)		74369	123961	33369

** WW/Equipment Loads are incorporated into Sign and Truss Loads to determine Reactions and Moments.

Post Loads

Dead	Wind	Ice	Group II t_c	Group III t_c
2899	626	478	125	188

Load Combinations for Design Sign Area (Max Condition)

Truss Member Loads	DL	DL +WL	DL+1/2 WL+IL
Truss Chords (Pc)	10624	31284	25721
Vertical Diagonals (Pv)	6054	6054	9775
Horizontal Diagonals (Ph)	2162	4681	2735
Vertical Struts (Psv)	4087	5470	6599
Horizontal Struts (Psh)	2068	3254	3572

Serviceability Requirements

Truss DL Deflection	0.40 in.
Total DL Deflection	2.24 in.
Limit for Deflection	2.72 in.
Camber Used (Cu)	4.25 in.
Permanent Camber (Cp)	3.85 in.
Post Tilt	0.73 in.
Post Deflection Limits	7.61 in.
D^2/400 Limit	2.43 in.
Horizontal WL Deflection	1.90 in.
Horizontal Defl Limits	10.20 in.

	Post Loads					
	M_N	M_{tc}	M_z/Torsion	V_N	V_{tc}	Axial
Group II Comb. 1 (DL+WL)	124977	100759	126416	5670	1118	6247
Group III Comb. 1 (DL+1/2WL+IL)	64246	120249	63208	2875	559	8239
Group II Comb. 2 (DL+WL)	74933	111902	83156	3434	1677	6247
Group III Comb. 2 (DL+1/2WL+IL)	39629	126504	41578	1757	839	8239

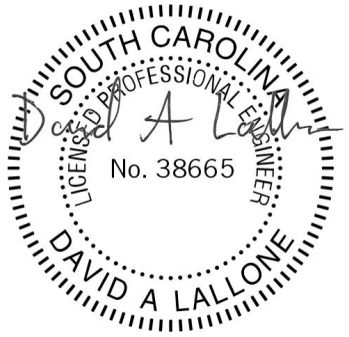

Oct 25 2023

0

Walpar (c) 2014

Box Truss Cantilever Structure Design

Job No : C3546 Structure No : OH-31A Station : 51+00(EB)

Material Information

	Pipe Size (Min Yield)	Unbraced Lgth	CSR Group II	CSR Group III
Truss Chords	3.500 x 0.188 (52 ksi)	7.65 ft	0.51	0.42
Vertical Diagonals	1.315 x 0.133 (52 ksi)	5.19 ft	0.39	0.63
Vertical Struts	1.315 x 0.133 (52 ksi)	3.50 ft	0.56	0.68
Horizontal Diagonals	1.660 x 0.140 (52 ksi)	4.86 ft	0.41	0.24
Horizontal Struts	1.660 x 0.140 (52 ksi)	3.00 ft	0.17	0.18
Post	24.000 x 0.375 (52 ksi)	25.35 ft	0.32	0.24

Structure Detail Information

Truss to Post Connection

Connection Bolt Qty & Size	6 - ¾" ø A325
Connection Plate Weld "A"	¼ fillet
Connection Plate Weld "B"	3/16 fillet
Connection Plate Welds "C"&"D"	3/16 fillet

Post Detail

Maximum Anchor Bolt Pullout	31155 lbs		
Anchor Bolt Circle	30 in. Dia		
Anchor Bolt Yield	55 ksi		
Anchor Bolt Qty & Size	8 - 1.5" ø	ACI 318 App D checked	
Anchor Bolt Length (Embed Used)	4.50 ft (3.5 ft)	with Min. Req'd Embed	2.29 ft
Anchor Bolt CSR	0.51		
Base Plate Thickness	1.5 in.		
Base Plate Weld	5/16 fillet		
Gusset Plates at Base	8-½" x 12"		

Sign Hanger Detail

Design hanger spacing 9.00 ft

Sign Hanger U-Bolt type ASTM-A307

SIGN	Max UBL at End	Max Spacing	Hanger U-Bolt	Sign Hanger	Hanger Support
1	3.25 ft	9.00 ft	2 - ½" ø	L5x3x5/16	W6x9

Structure Input (For Foundation Designs)

Sign DL React (DLS)	1.96 k
Truss DL React (DLT)	1.39 k
Post DL React (DLP)	2.90 k
Truss WL React (Wh)	0.55 k
Truss WL React (Wp)	4.05 k
Post WL React (Wv)	0.63 k
Dist. To DLS & Wp (L1)	27.00 ft
Distance To Wh (L2)	17.00 ft
Distance To Rh (H1)	23.60 ft
Distance To Wv (H2)	12.68 ft
Torque at Base (Mt)	126.4 k-ft
Min Ped Wth (PL & PW)	4.00 ft

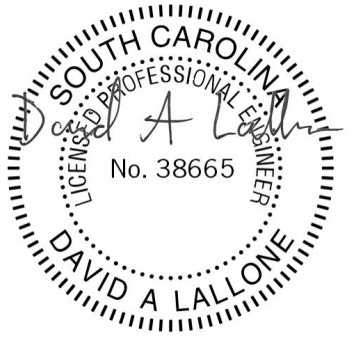

Oct 25 2023

0

C5 - 3 of 8

Walpar (c) 2014

Box Truss Cantilever Structure Design

Job No : C3546 Structure No : OH-31A Station : 51+00(EB)

Vibration and Fatigue (Per AASHTO 6th Edition)

Natural Wind Gust Load on Signs/C_d 4.42 psf
Natural Wind Gust Load on Truss 5.30 psf

Truck Induced Gust Load on Truss 17.54 psf
Extent of Truck Induced Gust 12.00 ft
Truss Area for Truck Induced Gust 0.83 sq ft / ft
Location of Center of Truck Induced Gust 28.00 ft

Truss Load Summary for Vibration and Fatigue

Loads (i)	NWG(i)	TIG(i)
1	89	
2	580	174
WW1	182	561
Post Reaction	851	735
Maximum Moments	21106	20592

Member Forces for Vibration and Fatigue

Truss Members	P_{NWG}	P_{TG}
Truss Chords	3518	2942
Vertical Diagonals	-	545
Horizontal Diagonals	690	-
Vertical Struts	-	368
Horizontal Struts	425	-

	Post Loads at Base				
	M_N	M_Y	M_z/Torsion	V_N	Axial
Natural Wind	23212	-	21106	1098	-
Truck Induced Gust	-	20592	-	-	735

Vibration and Fatigue Stresses

	NWG (ksi)	TIG (ksi)	Allowable (ksi)
Post/Truss Connection	0.98	0.82	2.60
Truss Vertical Diagonals	-	0.74	1.20
Truss Horizontal Diagonals	0.64	-	1.20
Truss Vertical Struts	-	0.74	1.20
Truss Horizontal Struts	0.64	-	1.20
Post Base Connection	0.81	0.72	4.50
Base Stiffener Termination	1.72	1.53	7.00
Anchor bolts	4.00	3.64	7.00

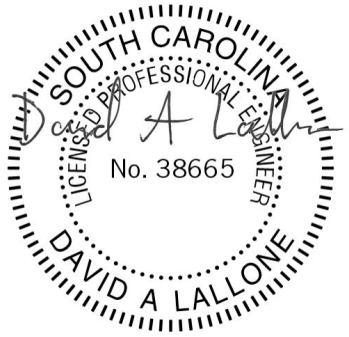

Oct 25 2023

0

Walpar (c) 2014

Box Truss Cantilever Structure Design

Job No : C3546 Structure No : OH-31A Station : 51+00(EB)

Foundation Design

Boring Type SPT Boring Designation G-039
Major Soil Type Cohesionless Depth to Water NA Surcharge (Frost) Depth 2 ft
Ground Slope 4:1 Consider slope stability? Y

SOIL TYPES	
01-GP	07-SM
02-GW	08-ML
03-GM	09-MH
04-GC	10-SC
05-SP	11-CL
06-SW	12-CH

Soil Properties

Depth	N Value	γ' (pcf)	Φ (deg)	S_u (lbf/ft^2)	α	β	f_{SN} (lbf/ft^2)	$(N_1)_{60}$	Soil Type
**0 - 3	6	90	25	750	0.55		413	12	09
3 - 8	10	100	27			0.79	410	20	08
8 - 10	18	110	29			1.10	962	32	08
10 - 35	18	110	27			1.04	1190	18	08

* Soil Type 13 indicates rock layer with N>60 for cohesionless soil or N>40 for cohesive soils
**Top 2.0 ft of soil will not contribute to load resistance

Soil Bearing Capacity for Spread Footing Design

Footing width, B 9.00 ft
Footing length, L 17.00 ft
Eccentricity, e_L 1.27 ft
Eccentricity, e_B 1.09 ft
Effective ftg width, B' 6.82 ft
Effective ftg width, L' 14.46 ft

Ultimate bearing capacity, q_{ult} 10.49 ksf
Allowable Bearing Capacity 3.25 ksf
Bearing Capacity used *** 2.00 ksf

Total wgt of load, foundation and soil, Pt 91.71 k
Normal moment, ML 116.45 ft-k
Transverse moment, Mw 99.84 ft-k
Distance from ground to bottom of footing, d_{min} 3.13 ft
Distance from ground to bottom of footing, D_f 4.25 ft
Distance to ground water from bottom of ftg, z_w
Overburden pressure at base of footing, q 0.45 ksf
Weighted average soil unit weight, γ 105 pcf

***Note: Bearing capacities greater than 4.0 ksf will rarely effect spread footing pad size



Oct 25 2023

0

C5 - 5 of 8

Walpar (c) 2014

Box Truss Cantilever Structure Design

Job No : C3546 Structure No : OH-31A Station : 51+00(EB)

Cantilever Spread Footing Design

Material/Soil Specifications and Safety Factors

Concrete f'_c :	3000 psi	Concrete wgt :	150 pcf
Rebar yield f_y :	60000 psi	Rebar F_s :	24000 psi
Soil Bearing Capacity :	2000 psf	Soil unit wgt :	110 pcf

Load Safety Factor[1] : 1.15

Loads and Locations From Structure

Sign DL React (DLS)	1.96 k	Distance to DLS & Wp (L1)	27.00 ft
Truss DL React (DLT)	1.39 k	Distance to Wh (L2)	17.00 ft
Post DL React (DLP)	2.90 k	Distance to Rh (H1)	23.60 ft
Truss WL React (Wh)	0.55 k	Distance to Wv (H2)	12.68 ft
Truss WL React (Wp)	4.05 k	Torque at Base (M_t)	126.4 ft-k
Post WL React (Wv)	0.63 k	Min Ped Width (PL/PW)	4.00 ft

Loads at Top of Pedestal from Structure

Axial load (P)	6.25 k		
Moment (ML)	116.45 ft-k	Moment (Mw)	99.84 ft-k
Shear (VL)	5.22 k	Shear (Vw)	1.05 k

Final Spread Footing Design Sizes

Pad Length (L)	17.00 ft	Pedestal Width/Length	4.00 ft (PW/PL)
Pad Width (W)	9.00 ft	Pedestal Projection	1.25 ft (PE)
Pad Thickness (T)	1.50 ft	Ground line to Top of Pad	2.75 ft (PT)

Reinforcement

Pad	Pedestal
Top Each Way - #4 Bars @ 12" o.c.	32 - #8 Vertical Bars Equally Spaced
X Direction - 9 - #5 Bars @ 12" o.c.	4 - #4 Ties @ 11.25" o.c.
Y Direction - 17 - #4 Bars @ 12" o.c.	

Serviceability	Quantities
2.89% of footing in uplift	1014 lbs of reinforcement
Safety factor against overturning = 7.35	10.87 cyd of concrete

Uncracked Section Calculations

Wgt of soil above pad (Ps)	41.44 k		
Wgt of concrete (Pc)	44.03 k	Total Area (A)	153.00 ft²
Total Load (Pt)	91.71 k		
X	8.50 ft	Y	4.50 ft
Ix	1032.75 ft⁴	Iy	3684.75 ft⁴
Mx	121.44 k-ft	My	166.95 k-ft

Corner Stresses [Factored loads[1] (unfactored loads)]

F1	1.51 ksf (1.39 ksf)
F2	0.46 ksf (0.47 ksf)
F3	-0.31 ksf (-0.20 ksf)
F4	0.74 ksf (0.72 ksf)

Cracked Section Calculations [Factored loads[1] (unfactored loads)]

A1	91.00 ft² (109.86 ft²)	L1	10.11 ft (12.21 ft)	W1	9.00 ft (9.00 ft)
A2	43.83 ft² (34.29 ft²)	L2	6.89 ft (4.79 ft)	W2	6.36 ft (7.15 ft)
A3	9.08 ft² (4.42 ft²)	L3	6.89 ft (4.79 ft)	W3	2.64 ft (1.85 ft)
A'	143.92 ft² (148.58 ft²)				
Xc	0.39 ft (0.21 ft)	X1	3.44 ft (2.40 ft)	Y1	0.00 ft (0.00 ft)
Yc	0.23 ft (0.12 ft)	X2	-5.06 ft (-6.10 ft)	Y2	1.32 ft (0.92 ft)
		X3	-3.91 ft (-5.30 ft)	Y3	-2.74 ft (-3.27 ft)
Ixc	888.10 ft⁴ (958.91 ft⁴)				
Iyc	3303.73 ft⁴ (3466.46 ft⁴)				
Ixcyc	-212.32 ft⁴ (-121.01 ft⁴)				
Mxc	100.48 ft-k (94.99 ft-k)				
Myc	131.04 ft-k (126.33 ft-k)				
X'	8.89 ft (8.71 ft)				
Y'	4.73 ft (4.62 ft)				

Corner Stresses [Factored loads[1] (unfactored loads)]

F1	1.60 ksf (1.43 ksf)
F2	0.48 ksf (0.49 ksf)
F3	-0.33 ksf (-0.19 ksf)
F4	0.79 ksf (0.75 ksf)



Oct 25 2023

0

Walpar (c) 2014

Box Truss Cantilever Structure Design

Job No : C3546 Structure No : OH-31A Station : 51+00(EB)

Cantilever Spread Footing Design (cont.)

Moment and Shear Calculation Results

L_{x1}	4.50 ft	W_{x1}	0.00 ft	S_{y1}	0.85 ksf	S_{x1}	1.20 ksf
L_{x2}	3.17 ft	W_{x2}	1.33 ft	S_{y2}	0.79 ksf	S_{x2}	1.03 ksf
L_{y1}	4.00 ft	W_{y1}	4.50 ft	S_{y3}	0.73 ksf	S_{x3}	0.89 ksf
L_{y2}	1.33 ft	W_{y2}	3.17 ft	Pcs	0.53 ksf		
				DTS_y	2.86 k	DTS_x	0.95 k
				M_{YY}	8.70 ft-k	M_{XX}	1.77 ft-k

Reinforcement Calculations

f_{cr} : 1596 psi v_{cr} : 69 psi n : 9.29
b : 12.00 in d : 14.00 in x : 5.25 in

About Y Axis		About X Axis	
p :	0.0018	p :	0.0018
k :	0.17	k :	0.17
j :	0.94	j :	0.94
f_{ca} :	563 psi	f_{ca} :	115 psi
v_{ca} :	18 psi	v_{ca} :	6 psi
Mt :	190555 in-lb	Mt :	38784 in-lb
ld_r :	33.35 in	ld_r :	20.46 in
ld_a :	75.00 in	ld_a :	27.00 in
ld_{min} :	34.23 in	ld_{min} :	27.39 in
A_{sr} :	0.25 in²	A_{sr} :	0.05 in²
A_s Used :	0.31 in²	A_s Used :	0.20 in²

Torque Calculations

P_1 :	25.50 k	P_{1P} :	11.00 k
P_2 :	13.50 k	P_{2P} :	11.00 k
TQ_m :	214.33 ft-k	T_u :	126.21 ft-k
TQ_a :	126.42 ft-k	T_{uo} :	95.23 ft-k
		A_{lr} :	2.99 in²
		A_{la} :	3.16 in²

Factor of safety against sliding (μ=0.40) : 7.02

Pedestal Calculations

V_1 : 5327 lbs V_2 : 0 lbs V_t : 0 lbs

About Y Axis		About X Axis	
C_x :	24.00 in	C_y :	24.00 in
G_x :	40.00 in	G_y :	40.00 in
f_a :	2.71 psi	fa :	3211 psi
F_a :	1596 psi	Fa :	26334 psi
f_{bx} :	54 psi	f_{by} :	72 psi
F_{bx} :	1596 psi	F_{by} :	1596 psi
M_x :	104028 ft-lb	M_y :	137338 ft-lb
M_{ox} :	672448 ft-lb	M_{oy} :	672448 ft-lb
I_x :	551952 in⁴	I_y :	551952 in⁴
A_g :	2304 in²	A_{sm} :	23.04 in²
A_{st} :	22.12 in²	A_s :	6.32 in²
QTY :	32	A_b :	0.79 in²
CSR :	0.10	CSM :	0.36



Oct 25 2023

0

C5 - 7 of 8

Walpar (c) 2014

Box Truss Cantilever Structure Design

Job No : C3546 Structure No : OH-31A Station : 51+00(EB)

Cantilever Cylindrical Footing Design

Material/Soil Specifications and Safety Factors

Concrete f '$_c$:	3000 psi	Concrete wgt :	150 pcf
Rebar yield f_y :	60000 psi	Min safety factor for torsion :	1.13
Reinforcement Clear :	4 in	Min safety factor for lateral load :	2.86

Loads and Locations From Structure

Sign DL React (DLS)	1.96 k	Dist. To DLS & Wp (L1)	27.00 ft
Truss DL React (DLT)	1.39 k	Distance To Wh (L2)	17.00 ft
Post DL React (DLP)	2.90 k	Distance To Rh (H1)	23.60 ft
Truss WL React (Wh)	0.55 k	Distance To Wv (H2)	12.68 ft
Truss WL React (Wp)	4.05 k	Footing Projection (H3)	1.25 ft
Post WL React (Wv)	0.63 k	Torque at Base (M_t)	126.4 ft-k

Loads at Top of Cylinder from Structure

Dead Load Moment (MDL)	101.19 ft-k	Effective height (Heff)	22.29 ft
Wind Load Moment (MWL)	116.45 ft-k	Lateral load from MDL (PDL)	1.04 k
Resultant Moment (MR)	159.68 ft-k	Resultant Lateral Load (PRL)	7.16 k
Wind Load Shear at Base (PWL)	5.22 k	Total Dead Load at Column Base (TDL)	6.25 k
Transverse Load (t_c)	1.04 k		

Final Cylindrical Footing Design Sizes

Req'd A_s	6.35 in²	Rebar Cage Dia (D1)	37.87 in
1% Cyl Area Min A_m	18.10 in²	Vertical bar spacing	6.26 in
Reinf Area Provided A_p	19.00 in²		

USE 48 in DIA x 14'-0 CYLINDER
w/ 19- # 9 VERT. BARS & 16 - #4 HOOPS
Extra Hoop 3 inches below top hoop

Serviceability

Calculated torsional / axial safety factors = 1.71 / 11.27
Calculated lateral safety factor = 7.14

Quantities

992 lbs of reinforcement
6.52 cyd of concrete

Torsion Calculation Results
(from Beta Method)

Cylinder Embedment	12.75 ft
Axial load	6.25 k
Torsional load	126.42 ft-k
Weight of shaft	26.39 k
Max Allow Torque on reinf CYL	206.47 ft-k
Side Resist. Capacity	96.3 k
Allowable side resist. torque	192.56 ft-k
N for Tip Rresist. (BPF)	18.00
Tip Resist. Capacity	271.43 k
Allowable Tip Resist. Torque	23.7 ft-k
	0.0 ft-k
Total Allowable Torque	216.3 ft-k
Calc'd Torsional safety factor	1.71

Lateral Load Calculation Results
(from Brom's Method)

Soil friction angle Φ	27.0 deg
Soil unit weight γ	105 pcf
AVG $(N_1)_{60}$ over req'd dp (BPF)	21
Lateral load from structure	7.2 k
Moment from structure	159.7 ft-k
Rankine Passive Pressure Coeff. K_P	3.14
Ultimate soil resistance P_{ult}	98 k
Allowable soil resistance P_{max}	46 k
Ultimate soil mom cap M_{ult}	1370 ft-k
Allowable soil mom cap M_{max}	637 ft-k
Ground line moment	169 ft-k
Dist GL to 0 shear pt in CYL	3.90 ft
Maximum moment in shaft	192 ft-k



Oct 25 2023

0

C5 - 8 of 8

Walpar (c) 2014

walpar
A valmont COMPANY

0

Subject Box Truss Cantilever Design Information Sheet C6

Job No C3546 By IWL Date 8/24/23

GROUP 2 Chk'd By RRW Date 9/12/23

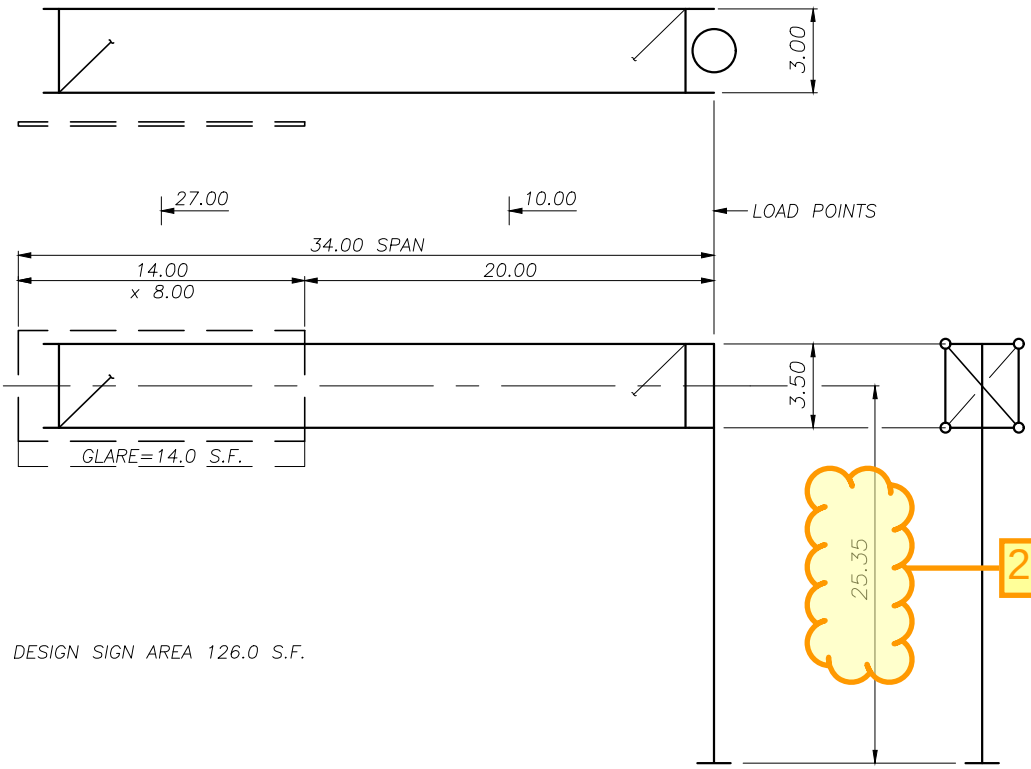

8 – 1.50"ø ANCHOR BOLTS

STR NO: OH–31B

STA NO: 66+00(EB)

CHORDS	3.500 x 0.188
VERTICAL DIAGONALS	1.315 x 0.133
VERTICAL STRUTS	1.315 x 0.133
HORIZ STRUTS & DIAG'S	1.660 x 0.140
POST	24.000 x 0.375

SOUTH CAROLINA LICENSED PROFESSIONAL ENGINEER
David A Lallone
No. 38665
DAVID A LALLONE

Oct 25 2023

Box Truss Cantilever Structure Design

Reference Walpar Job Number : C3546
Reference Design Information Sheet Number : C6 Structure : OH-31B Station : 66+00(EB)
State : SC
AASHTO Specification : 6th Edition Fatigue Category : II
Design Wind Velocity (V) : 100 mph

Structure Dimensions

Span (S) 34.00 ft Truss Hgt (U) 3.50 ft Truss Depth (Y) 3.00 ft
Post Hgt (H) 24.90 ft Coeff of Hgt (Kz) 1.00

Sign Information

Actual Sign Area: 126.00 sq ft

Z Ecc to bottom of glare screen

Sign	Load (i)	Lgth (B_i)	Hgt (D_i)	Location (a_i)	Unit wgt	Depth	C_d	Z Ecc	Area	Exit Panel
1	2	14.00	8.00	27.00	7.00		1.17	5.00	126.00	

Walkway Information

	Lgth	Location	Width	Unit wgt	Y Ecc
WW1	18.00	25.00	2.54	60	4.72
WW2					

Load Summary Estimate

Weight of truss only 1623 lbs
Weight of truss with signs 2505 lbs
Post weight † 3009 lbs

† includes additonal wgt from base plate



Oct 25 2023

0

Walpar (c) 2014

Box Truss Cantilever Structure Design

Job No : C3546 Structure No : OH-31B Station : 66+00(EB)

Loads

Unit wind load on sign(s)/C_d: 29.18 psf Unit wind load on exposed truss: 35.02 psf Unit wgt of truss: 40.75 plf Unit ice wgt on truss: 19.30 plf

Truss Area for Wind Load (A_t): 0.84 sq ft / ft ***All loads in charts in lbs, ft or ft-lbs unless noted**

Truss Load Summary For Actual Sign & WW Condition

	Load (i)	Dead	Wind (W_p & W_h)	Ice
Sign and Truss Loads	1	815	585	386
	2	1453	4311	648
WW Loads	WW1	1080	385	480
Post Reaction (R_1)		3348	5281	1514
Truss Moments (M)		74369	131873	33369

** WW/Equipment Loads are incorporated into Sign and Truss Loads to determine Reactions and Moments.

Post Loads

Dead	Wind	Ice	Group II t_c	Group III t_c
3021	700	502	140	210

Load Combinations for Design Sign Area (Max Condition)

Truss Member Loads	DL	DL +WL	DL+1/2 WL+IL
Truss Chords (Pc)	10624	32603	26381
Vertical Diagonals (Pv)	5931	5931	9664
Horizontal Diagonals (Ph)	2088	4939	2850
Vertical Struts (Psv)	4004	5475	6523
Horizontal Struts (Psh)	1997	3259	3507

Serviceability Requirements

Truss DL Deflection	0.40 in.
Total DL Deflection	2.34 in.
Limit for Deflection	2.72 in.
Camber Used (Cu)	4.25 in.
Permanent Camber (Cp)	3.85 in.
Post Tilt	0.81 in.
Post Deflection Limits	7.99 in.
D^2/400 Limit	2.43 in.
Horizontal WL Deflection	2.16 in.
Horizontal Defl Limits	10.20 in.

	Post Loads					
	M_N	M_{tc}	M_z/Torsion	V_N	V_{tc}	Axial
Group II Comb. 1 (DL+WL)	140537	104149	134485	6057	1196	6369
Group III Comb. 1 (DL+1/2WL+IL)	72026	121817	67242	3066	598	8386
Group II Comb. 2 (DL+WL)	84217	116609	88463	3665	1794	6369
Group III Comb. 2 (DL+1/2WL+IL)	44297	128857	44232	1870	897	8386



Oct 25 2023

0

C6 - 2 of 8

Walpar (c) 2014

Box Truss Cantilever Structure Design

Job No : C3546 Structure No : OH-31B Station : 66+00(EB)

Material Information

	Pipe Size (Min Yield)	Unbraced Lgth	CSR Group II	CSR Group III
Truss Chords	3.500 x 0.188 (52 ksi)	7.65 ft	0.53	0.43
Vertical Diagonals	1.315 x 0.133 (52 ksi)	5.19 ft	0.38	0.63
Vertical Struts	1.315 x 0.133 (52 ksi)	3.50 ft	0.56	0.67
Horizontal Diagonals	1.660 x 0.140 (52 ksi)	4.86 ft	0.44	0.25
Horizontal Struts	1.660 x 0.140 (52 ksi)	3.00 ft	0.17	0.18
Post	24.000 x 0.375 (52 ksi)	26.65 ft	0.35	0.25

Structure Detail Information

Truss to Post Connection

Connection Bolt Qty & Size	6 - ¾" ø A325
Connection Plate Weld "A"	¼ fillet
Connection Plate Weld "B"	3/16 fillet
Connection Plate Welds "C"&"D"	3/16 fillet

Post Detail

Maximum Anchor Bolt Pullout	33996 lbs		
Anchor Bolt Circle	30 in. Dia		
Anchor Bolt Yield	55 ksi		
Anchor Bolt Qty & Size	8 - 1.5" ø	ACI 318 App D checked	
Anchor Bolt Length (Embed Used)	4.50 ft (3.5 ft)	with Min. Req'd Embed	2.42 ft
Anchor Bolt CSR	0.59		
Base Plate Thickness	1.5 in.		
Base Plate Weld	5/16 fillet		
Gusset Plates at Base	8-½" x 12"		

Sign Hanger Detail

Design hanger spacing 9.00 ft

Sign Hanger U-Bolt type ASTM-A307

SIGN	Max UBL at End	Max Spacing	Hanger U-Bolt	Sign Hanger	Hanger Support
1	3.25 ft	9.00 ft	2 - ½" ø	L5x3x5/16	W6x9

Structure Input (For Foundation Designs)

Sign DL React (DLS)	1.96 k
Truss DL React (DLT)	1.39 k
Post DL React (DLP)	3.02 k
Truss WL React (Wh)	0.59 k
Truss WL React (Wp)	4.30 k
Post WL React (Wv)	0.70 k
Dist. To DLS & Wp (L1)	27.00 ft
Distance To Wh (L2)	17.00 ft
Distance To Rh (H1)	24.90 ft
Distance To Wv (H2)	13.32 ft
Torque at Base (Mt)	134.5 k-ft
Min Ped Wth (PL & PW)	4.00 ft



Oct 25 2023

0

C6 - 3 of 8

Walpar (c) 2014

Box Truss Cantilever Structure Design

Job No : C3546 Structure No : OH-31B Station : 66+00(EB)

Vibration and Fatigue (Per AASHTO 6th Edition)

Natural Wind Gust Load on Signs/C_d 4.42 psf
Natural Wind Gust Load on Truss 5.30 psf

Truck Induced Gust Load on Truss 17.54 psf
Extent of Truck Induced Gust 12.00 ft
Truss Area for Truck Induced Gust 0.83 sq ft / ft
Location of Center of Truck Induced Gust 28.00 ft

Truss Load Summary for Vibration and Fatigue

Loads (i)	NWG(i)	TIG(i)
1	89	
2	580	174
WW1	182	561
Post Reaction	851	735
Maximum Moments	21106	20592

Member Forces for Vibration and Fatigue

Truss Members	P_{NWG}	P_{TG}
Truss Chords	3518	2942
Vertical Diagonals	-	545
Horizontal Diagonals	690	-
Vertical Struts	-	368
Horizontal Struts	425	-

	Post Loads at Base				
	M_N	M_Y	M_z/Torsion	V_N	Axial
Natural Wind	24638	-	21106	1110	-
Truck Induced Gust	-	20592	-	-	735

Vibration and Fatigue Stresses

	NWG (ksi)	TIG (ksi)	Allowable (ksi)
Post/Truss Connection	0.98	0.82	2.60
Truss Vertical Diagonals	-	0.74	1.20
Truss Horizontal Diagonals	0.64	-	1.20
Truss Vertical Struts	-	0.74	1.20
Truss Horizontal Struts	0.64	-	1.20
Post Base Connection	0.86	0.72	4.50
Base Stiffener Termination	1.83	1.53	7.00
Anchor bolts	4.30	3.64	7.00



Oct 25 2023

0

C6 - 4 of 8

Walpar (c) 2014

Box Truss Cantilever Structure Design

Job No : C3546 Structure No : OH-31B Station : 66+00(EB)

Foundation Design

Boring Type SPT Boring Designation G-042
Major Soil Type Cohesionless Depth to Water 15 ft Surcharge (Frost) Depth 2 ft
Ground Slope 4:1 Consider slope stability? Y

SOIL TYPES	
01-GP	07-SM
02-GW	08-ML
03-GM	09-MH
04-GC	10-SC
05-SP	11-CL
06-SW	12-CH

Soil Properties

Depth	N Value	γ' (pcf)	Φ (deg)	S_u (lbf/ft^2)	α	β	f_{SN} (lbf/ft^2)	$(N_1)_{60}$	Soil Type
**0 - 4	4	106	31	500	0.55		275	8	10
4 - 6.5	3	102	35			0.24	132	6	05
6.5 - 8	28	114	36			1.14	870	54	07
8 - 13.5	15	108	33			1.06	1213	24	07
13.5 - 15	6	103	29			0.40	583	9	07
15 - 18.5	6	53	29					8	07
18.5 - 20	16	58	32					21	07
20 - 35	16	58	31					16	07

* Soil Type 13 indicates rock layer with N>60 for cohesionless soil or N>40 for cohesive soils
**Top 2.0 ft of soil will not contribute to load resistance

Soil Bearing Capacity for Spread Footing Design

Footing width, B 9.00 ft
Footing length, L 17.00 ft
Eccentricity, e_L 1.43 ft
Eccentricity, e_B 1.12 ft
Effective ftg width, B' 6.76 ft
Effective ftg width, L' 14.15 ft

Total wgt of load, foundation and soil, Pt 91.84 k
Normal moment, ML 130.96 ft-k
Transverse moment, Mw 102.77 ft-k
Distance from ground to bottom of footing, d_{min} 3.13 ft
Distance from ground to bottom of footing, D_f 4.25 ft
Distance to ground water from bottom of ftg, z_w 11.88 ft
Overburden pressure at base of footing, q 0.47 ksf
Weighted average soil unit weight, γ 107 pcf

Ultimate bearing capacity, q_{ult} 27.89 ksf
Allowable Bearing Capacity 9.25 ksf
Bearing Capacity used *** 2.00 ksf

***Note: Bearing capacities greater than 4.0 ksf will rarely effect spread footing pad size



Oct 25 2023

0

C6 - 5 of 8

Walpar (c) 2014

Box Truss Cantilever Structure Design

Job No : C3546 Structure No : OH-31B Station : 66+00(EB)

Cantilever Spread Footing Design

Material/Soil Specifications and Safety Factors

Concrete f'_c :	3000 psi	Concrete wgt :	150 pcf
Rebar yield f_y :	60000 psi	Rebar F_s :	24000 psi
Soil Bearing Capacity :	2000 psf	Soil unit wgt :	110 pcf

Load Safety Factor[1] : 1.15

Loads and Locations From Structure

Sign DL React (DLS)	1.96 k	Distance to DLS & Wp (L1)	27.00 ft
Truss DL React (DLT)	1.39 k	Distance to Wh (L2)	17.00 ft
Post DL React (DLP)	3.02 k	Distance to Rh (H1)	24.90 ft
Truss WL React (Wh)	0.59 k	Distance to Wv (H2)	13.32 ft
Truss WL React (Wp)	4.30 k	Torque at Base (M_t)	134.5 ft-k
Post WL React (Wv)	0.70 k	Min Ped Width (PL/PW)	4.00 ft

Loads at Top of Pedestal from Structure

Axial load (P)	6.37 k		
Moment (ML)	130.96 ft-k	Moment (Mw)	102.77 ft-k
Shear (VL)	5.59 k	Shear (Vw)	1.12 k

Final Spread Footing Design Sizes

Pad Length (L)	17.00 ft	Pedestal Width/Length	4.00 ft (PW/PL)
Pad Width (W)	9.00 ft	Pedestal Projection	1.25 ft (PE)
Pad Thickness (T)	1.50 ft	Ground line to Top of Pad	2.75 ft (PT)

Reinforcement

Pad	Pedestal
Top Each Way - #4 Bars @ 12" o.c.	32 - #8 Vertical Bars Equally Spaced
X Direction - 9 - #5 Bars @ 12" o.c.	4 - #4 Ties @ 11.25" o.c.
Y Direction - 17 - #4 Bars @ 12" o.c.	

Serviceability	Quantities
4.10% of footing in uplift	1014 lbs of reinforcement
Safety factor against overturning = 18.60	10.87 cyd of concrete

Uncracked Section Calculations

Wgt of soil above pad (Ps)	41.44 k		
Wgt of concrete (Pc)	44.03 k	Total Area (A)	153.00 ft²
Total Load (Pt)	91.84 k		
X	8.50 ft	Y	4.50 ft
Ix	1032.75 ft⁴	Iy	3684.75 ft⁴
Mx	125.27 k-ft	My	185.94 k-ft

Corner Stresses [Factored loads[1] (unfactored loads)]

F1	1.57 ksf (1.45 ksf)
F2	0.48 ksf (0.50 ksf)
F3	-0.37 ksf (-0.25 ksf)
F4	0.72 ksf (0.70 ksf)

Cracked Section Calculations [Factored loads[1] (unfactored loads)]

A1	85.41 ft² (103.48 ft²)	L1	9.49 ft (11.50 ft)	W1	9.00 ft (9.00 ft)
A2	44.51 ft² (36.98 ft²)	L2	7.51 ft (5.50 ft)	W2	5.93 ft (6.72 ft)
A3	11.54 ft² (6.27 ft²)	L3	7.51 ft (5.50 ft)	W3	3.07 ft (2.28 ft)
A'	141.46 ft² (146.73 ft²)				
Xc	0.49 ft (0.28 ft)	X1	3.76 ft (2.75 ft)	Y1	0.00 ft (0.00 ft)
Yc	0.28 ft (0.16 ft)	X2	-4.74 ft (-5.75 ft)	Y2	1.54 ft (1.14 ft)
		X3	-3.49 ft (-4.83 ft)	Y3	-2.45 ft (-2.98 ft)
Ixc	853.42 ft⁴ (931.35 ft⁴)				
Iyc	3222.19 ft⁴ (3391.95 ft⁴)				
Ixcyc	-252.76 ft⁴ (-160.78 ft⁴)				
Mxc	99.23 ft-k (94.26 ft-k)				
Myc	141.01 ft-k (135.54 ft-k)				
X'	8.99 ft (8.78 ft)				
Y'	4.78 ft (4.66 ft)				

Corner Stresses [Factored loads[1] (unfactored loads)]

F1	1.70 ksf (1.50 ksf)
F2	0.51 ksf (0.52 ksf)
F3	-0.41 ksf (-0.25 ksf)
F4	0.78 ksf (0.73 ksf)



Oct 25 2023

0

Walpar (c) 2014

Box Truss Cantilever Structure Design

Job No : C3546 Structure No : OH-31B Station : 66+00(EB)

Cantilever Spread Footing Design (cont.)

Moment and Shear Calculation Results

L_{x1}	4.50 ft	W_{x1}	0.00 ft	S_{y1}	0.89 ksf	S_{x1}	1.24 ksf
L_{x2}	3.17 ft	W_{x2}	1.33 ft	S_{y2}	0.82 ksf	S_{x2}	1.07 ksf
L_{y1}	4.00 ft	W_{y1}	4.50 ft	S_{y3}	0.76 ksf	S_{x3}	0.91 ksf
L_{y2}	1.33 ft	W_{y2}	3.17 ft	Pcs	0.53 ksf		
				DTS_y	3.22 k	DTS_x	1.02 k
				M_{YY}	9.81 ft-k	M_{XX}	1.90 ft-k

Reinforcement Calculations

f_{cr} : 1596 psi v_{cr} : 69 psi n : 9.29

b : 12.00 in d : 14.00 in x : 5.25 in

About Y Axis		About X Axis	
p :	0.0018	p :	0.0018
k :	0.17	k :	0.17
j :	0.94	j :	0.94
f_{ca} :	635 psi	f_{ca} :	123 psi
v_{ca} :	20 psi	v_{ca} :	6 psi
Mt :	215057 in-lb	Mt :	41553 in-lb
ld_r :	33.36 in	ld_r :	20.47 in
ld_a :	75.00 in	ld_a :	27.00 in
ld_{min} :	34.23 in	ld_{min} :	27.39 in
A_{sr} :	0.28 in²	A_{sr} :	0.05 in²
A_s Used :	0.31 in²	A_s Used :	0.20 in²

Torque Calculations

P_1 :	25.50 k	P_{1P} :	11.00 k
P_2 :	13.50 k	P_{2P} :	11.00 k
TQ_m :	214.33 ft-k	T_u :	136.70 ft-k
TQ_a :	134.48 ft-k	T_{uo} :	95.24 ft-k
		A_{lr} :	2.99 in²
		A_{la} :	3.16 in²

Factor of safety against sliding (μ=0.40) : 6.58

Pedestal Calculations

V_1 : 5697 lbs V_2 : 0 lbs V_t : 0 lbs

About Y Axis		About X Axis	
C_x :	24.00 in	C_y :	24.00 in
G_x :	40.00 in	G_y :	40.00 in
f_a :	2.76 psi	fa :	3417 psi
F_a :	1596 psi	Fa :	26334 psi
f_{bx} :	56 psi	f_{by} :	80 psi
F_{bx} :	1596 psi	F_{by} :	1596 psi
M_x :	107251 ft-lb	M_y :	153307 ft-lb
M_{ox} :	672448 ft-lb	M_{oy} :	672448 ft-lb
I_x :	551952 in⁴	I_y :	551952 in⁴
A_g :	2304 in²	A_{sm} :	23.04 in²
A_{st} :	22.12 in²	A_s :	6.32 in²
QTY :	32	A_b :	0.79 in²
CSR :	0.10	CSM :	0.39



Oct 25 2023

0

C6 - 7 of 8

Walpar (c) 2014

Box Truss Cantilever Structure Design

Job No : C3546 Structure No : OH-31B Station : 66+00(EB)

Cantilever Cylindrical Footing Design

Material/Soil Specifications and Safety Factors

Concrete f '$_c$:	3000 psi	Concrete wgt :	150 pcf
Rebar yield f_y :	60000 psi	Min safety factor for torsion :	1.13
Reinforcement Clear :	4 in	Min safety factor for lateral load :	2.86

Loads and Locations From Structure

Sign DL React (DLS)	1.96 k	Dist. To DLS & Wp (L1)	27.00 ft
Truss DL React (DLT)	1.39 k	Distance To Wh (L2)	17.00 ft
Post DL React (DLP)	3.02 k	Distance To Rh (H1)	24.90 ft
Truss WL React (Wh)	0.59 k	Distance To Wv (H2)	13.32 ft
Truss WL React (Wp)	4.30 k	Footing Projection (H3)	1.25 ft
Post WL React (Wv)	0.70 k	Torque at Base (M_t)	134.5 ft-k

Loads at Top of Cylinder from Structure

Dead Load Moment (MDL)	104.34 ft-k	Effective height (Heff)	23.45 ft
Wind Load Moment (MWL)	130.96 ft-k	Lateral load from MDL (PDL)	1.12 k
Resultant Moment (MR)	173.96 ft-k	Resultant Lateral Load (PRL)	7.42 k
Wind Load Shear at Base (PWL)	5.59 k	Total Dead Load at Column Base (TDL)	6.37 k
Transverse Load (t_c)	1.12 k		

Torsion Calculation Results
(from Beta Method)

Cylinder Embedment	13.75 ft
Axial load	6.37 k
Torsional load	134.48 ft-k
Weight of shaft	28.27 k
Max Allow Torque on reinf CYL	205.96 ft-k
Side Resist. Capacity	113.1 k
Allowable side resist. torque	226.19 ft-k
N for Tip Rresist. (BPF)	6.00
Tip Resist. Capacity	90.48 k
Allowable Tip Resist. Torque	30.0 ft-k
	0.0 ft-k
Total Allowable Torque	256.2 ft-k
Calc'd Torsional safety factor	1.91

Lateral Load Calculation Results
(from Brom's Method)

Soil friction angle Φ	32.7 deg
Soil unit weight γ	107 pcf
AVG $(N_1)_{60}$ over req'd dp (BPF)	21
Lateral load from structure	7.4 k
Moment from structure	174.0 ft-k
Rankine Passive Pressure Coeff. K_P	2.65
Ultimate soil resistance P_{ult}	99 k
Allowable soil resistance P_{max}	46 k
Ultimate soil mom cap M_{ult}	1478 ft-k
Allowable soil mom cap M_{max}	687 ft-k
Ground line moment	183 ft-k
Dist GL to 0 shear pt in CYL	4.08 ft
Maximum moment in shaft	208 ft-k

Final Cylindrical Footing Design Sizes

Req'd A_s	6.89 in²	Rebar Cage Dia (D1)	37.87 in
1% Cyl Area Min A_m	18.10 in²	Vertical bar spacing	6.26 in
Reinf Area Provided A_p	19.00 in²		

USE 48 in DIA x 15'-0 CYLINDER
w/ 19- # 9 VERT. BARS & 17 - #4 HOOPS
Extra Hoop 3 inches below top hoop

Serviceability

Calculated torsional / axial safety factors = 1.91 / 5.88
Calculated lateral safety factor = 7.09

Quantities

1064 lbs of reinforcement
6.98 cyd of concrete



Oct 25 2023

0

C6 - 8 of 8

Walpar (c) 2014

State :	South Carolina	Wind Velocity (mph) :	100
Federal Proj :	Carolina Crossroads Phase 1 & 2	Ice Load Area :	Yes
State Proj :	P039718		
County :	Lexington & Richland		
Route :	I-26 & I-126		

Reference:

6th Edition of Standard Specifications for Structural Supports for Highway Signs, Luminaires and Traffic Signals, as published by the American Association of State Highway and Transportation Officials, dated 2013. (Includes all Interims)

Index:

F1B			Cover sheet
F2B			Material Specifications & Foundation Design Assumptions
F3B	-	F7B	Truss Design format
F8B	-	F9B	Post Design format
F10B	-	F11B	Anchor Bolt and Base Plate Design format
F12B			Truss Connection to Upright Design format
F13B			Deflection and Camber format
F14B	-	F15B	Member Selection format
F16B			Truss Splice Design format
F17B			Vibration and Fatigue design format
F18B	-	F25B	Foundation Design (Spread and Cylindrical)

These design format sheets prefixed with "F" are furnished to illustrate basic formulas used by our design program. Work these format sheets with Box Truss Double Pole Design information sheet(s) prefixed with "BT" followed by design computation printouts. Step by step calculations are not supplied nor required. Results of the calculations presented are those produced from standard steel design calculations or the results of issues in fabrication. The approver may verify these results using any method they deem suitable, resulting increase in material requirements will be considered but may increase cost to the owner if deemed excessive. Walpar Engineers have attested that these designs and drawings meet the required specifications for the project stated above by sealing and signing the documents.

SOUTH CAROLINA LICENSED PROFESSIONAL ENGINEER
No. 38665
DAVID A LALLONE

Sep 8 2023

Material Specifications: (See General Notes drawing for complete list & for items not shown)

Hardware ----------	Primary	ASTM F3125 Gr A325
	Secondary	ASTM A307
Wide Flange Sections ----------		ASTM A992 (50 ksi)
Plates ----------		ASTM A709 Gr 50 (50 ksi)
Angles ----------		ASTM A36
Anchor Bolts ----------		ASTM F1554, Gr 55, S1
Anchor Nuts ----------		ASTM A563, Gr DH or A194 Gr 2H
Galvanizing ----------	Hardware	ASTM A153
	Structural	ASTM A123
Welding ----------		AWS Specifications D1.1, Latest Revision
Chords ----------Steel Pipe		ASTM A500 Gr B and/or C, ASTM A252 Gr 1, 2, or 3, ASTM A53 Gr A and/or B, and API 5L X42 through X80 (52 ksi Min. Yield and not to exceed 82 ksi)
Posts ----------Steel Pipe		
Struts & Diagonals ----------Steel Pipe		

Foundation Design Assumptions:

1. See printouts for maximum soil bearing capacity and passive pressure.
2. Wind gust factors are included in loadings.
3. Allowables increased by 33% for Group II loadings.
4. Concrete f 'c = 3000 psi
5. Reinforcing steel to be ASTM – A706, Grade 60, Fy = 60 KSI.
6. For double pole uprights, assume 25% overturning moment will be taken by second cylinder, therefore design cylinder for 75% of moment.
7. Design cylindrical footings as piles with lateral loads. Overturning moments and lateral soil forces are critical. Therefore, use plastic hinge approach for soil resistance and maximum moment in piles (Rutledge, Seiler, Broms method).

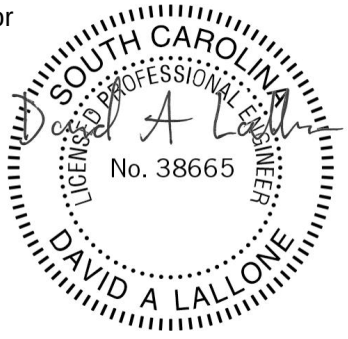

Sep 8 2023

Wind Load

$P = 0.00256\,(K_z)(G)(V^2)(I_r)(C_d)$ Eq. 3.8.3-1, page 3-5 (P min = 25 psf, for Group III only)

Alternate Method for Wind Pressure (Appendix C) (If required)

* $P = 0.00256\,(1.3*V)^2\,(C_d)\,(C_h)$ Eq (C.3-1 psf), page C-1)

Where
- V = Wind Velocity (MPH)
- C_d = Wind Drag Coefficient from Table 3.8.6-1, pg's 3-17, 3-18, 3-19
- K_z = Coefficient of Height from Table 3.8.4-1, pg 3-13
- C_h = Coefficient of Height from Table C.3-1, pg C-2
- G = Gust Effect Factor (minimum of 1.14)
- I_r = Wind Importance Factor = 1.00 for 50 year interval

Wind on Sign (C_d = see Table 3.8.6-1)

$W_p = (D_i)(B_i)(P_s)$
- P_s = wind on sign in PSF
- D_i = Sign Height (ft)
- B_i = Sign Length (ft)

Wind on Truss (C_d = 1.2)

$W_h = (A_t)(B_i)(P_t)$
- P_t = Wind on Truss in PSF
- A_t = Exposed area of truss per foot

$$= 2(\text{Chord OD}) + 1.414(\text{Vert Diag OD}) + \frac{\sum(\text{Vert Strut OD})(\text{Vert Strut Lgth})}{\text{Truss Length}}$$

- B_i = Exposed truss length (ft)

Support reactions due to wind

$WH_i = W_h + W_p$

$Rh_L = \frac{1}{L}\left[\sum_{i=1}^{n}(WH_i)(a_i)\right]$ (L = Span length: a_i = distance to centroid of section "i")

$Rh_R = \frac{1}{L}\left[\sum_{i=1}^{n}(WH_i)(L-a_i)\right]$ $Rh_{max.}$ = Greater of Rh_L or Rh_R

Point of zero shear

From right support $Am_h = Rh_R - \sum_{i=1}^{m} WH_i \le 0$

Moment due to wind

$M_h = Rh_L(L - Am_h) - \sum_{i=m+1}^{n} WH_i(a_i - Am_h)$

SOUTH CAROLINA LICENSED PROFESSIONAL ENGINEER No. 38665 DAVID A LALLONE

Sep 8 2023

Dead Load

Kv_i = 0 when struts are not used
Kv_i = 1 when struts are used
Hw = Estimated weight of signs and hangers = 7 psf, unless otherwise specified, see printouts
Ww = Estimated weight of walkway, if required, is calculated based on width of walkway and any specified railing, lights and safety angle and is calculated by the program based on spacing of supports. See printouts for estimated weight

W_d = Weight per foot of truss

$$= 4(\text{Chord Wgt}) + 2(\text{Vert Diag Lgth})(\text{Vert Diag Wgt}) + 2(\text{Horz Diag Lgth})(\text{Horz Diag Wgt}) \ldots + \frac{\sum(\text{Horz Strut Wgt})(\text{Horz Strut Lgth}) + (\text{Vert Strut Wgt})(\text{Vert Strut Lgth})}{\text{Truss Length}}$$

DL_i =Dead load acting at section "i"

$= (W_d)\,(b_i) + (Hw)\,(b_i)\,(d_i)\,(K_i) + (Ww)\,(b_i)\,(Kw_i)$

where,
Kw_i = 0 where walkway not required
Kw_i = 1 where walkway required
K_i = 0 where sign not required
K_i = 1 where sign required

Support reactions due to dead load

$$Rd_L = \frac{1}{L}\left[\sum_{i=1}^{n}(DL_i)(a_i)\right]$$

(L = Span length: a_i = distance to centroid of section "i")

$$Rd_R = \frac{1}{L}\left[\sum_{i=1}^{n}(DL_i)(L - a_i)\right]$$

$Rd_{max.}$ = Greater of Rd_L or Rd_R

Point of zero shear

From right support $Am_d = Rd_R - \sum_{i=1}^{m} DL_i \le 0$

Moment due to dead load

$$M_d = Rd_L(L - Am_d) - \sum_{i=m+1}^{n} DL_i(a_i - Am_d)$$

SOUTH CAROLINA LICENSED PROFESSIONAL ENGINEER
No. 38665
DAVID A LALLONE

Sep 8 2023

Ice Load

$Kw_i = 1$ if walkway is included, else $Kw_i = 0$
3 PSF applied to one face of sign and around surface of structural members. (See Fig 3.7-1, pg 3-4 for areas)
Assume ice on walkway = 21 lbs per lineal foot

Wi_i = Ice load for segment i

$$Wi_i = 3(b_i)\left[(d_i)(k_i) + \left(\frac{4\pi(\text{Chord OD}) + 2\pi(\text{Vert Diag OD})(1.414) + 2\pi(\text{Horiz Diag OD})(1.414) + \pi\sum(\text{Horiz Strut OD})(\text{Horiz Strut Lgth}) + (\text{Vert Strut OD})(\text{Vert Strut Lgth})}{\text{Truss Length}}\right) + 7(Kw_i)\right]$$

Support reactions due to ice load

$$Ri_L = \frac{1}{L}\left[\sum_{i=1}^{n}(Wi_i)(a_i)\right]$$

(L = Span length: a_i = distance to centroid of section "i")

$$Ri_R = \frac{1}{L}\left[\sum_{i=1}^{n}(Wi_i)(L - a_i)\right]$$

Ri_{max} = Greater of Ri_L or Ri_R

Point of zero shear

From right support $Am_i = Ri_R - \sum_{i=1}^{m} Wi_i \leq 0$

Moment due to ice load

$$M_i = Ri_L(L - Am_i) - \sum_{i=m+1}^{n} Wi_i(a_i - Am_i)$$

SOUTH CAROLINA LICENSED PROFESSIONAL ENGINEER
No. 38665
DAVID A LALLONE

Sep 8 2023

Group I (DL)

Chord Load (If $Kv_i = 0$, L = 2 * U; if $Kv_i = 1$, L = U) (U = truss depth: L = panel length)

$$Pc_I = \frac{Md}{2U}$$

Diagonals (vertical) L = 1.414 * U

$$Pv_I = 1414\left(\frac{Rd_{max}}{2}\right)$$

Struts (vertical) L = U

$$Ps_I = \frac{Rd_{max.}}{2}$$

Group II (DL + W)

Chord Load (If $Kv_i = 0$, L = 2 * U; if $Kv_i = 1$, L = U)

$$Pc_{II} = \frac{Md}{2*U} + \frac{Mh}{2*Y}$$ Y = Truss Width

Moment on front chord due to wind on sign near mid-span

$$Mc_{II} = \frac{(0.0052\,V^2)}{4}(A)(L)$$

A = sign area applied to one chord

$$A = \frac{(\text{Max Hgr Spc})(\text{Max Sign Ht})}{2}$$

L = 2 * U (no struts)
L = U (struts at each panel)

Diagonals (vertical) L = 1.414 * U

$Pv_{II} = Pv_I$

Diagonals (horizontal) $L = \sqrt{U^2 + Y^2}$

$$Pi_{II} = \frac{Rh_{max.}(L)}{2Y}$$

Struts (vertical) L = U

$Ps_{II} = Kv_i\,(Ps_I)$

Struts (horizontal) L = Y

$$Psh_{II} = Kv_i\left[\frac{(Rh_{max.})}{2}\right]$$



Sep 8 2023

Group III (DL + W/2 + IL)

Chord Load (If $Kv_i = 0$, L = 2 * U; if $Kv_i = 1$, L = U)

$$Pc_{III} = \frac{Md + Mi}{2 * U} + \frac{0.5\ Mh}{2 * Y}$$

Moment on front chord due to wind on sign near mid-span

$Mc_{III} = 0.5\ Mc_{II}$

Diagonals (vertical) L = 1.414 * U

$$Pv_{III} = 1.414\ \frac{[Rd_{max} + Ri_{max}]}{2}$$

Diagonals (horizontal) $L = \sqrt{U^2 + Y^2}$

$$Pi_{III} = \frac{(0.5)(Rh_{max})(L)}{2 * Y}$$

Struts (vertical) L = U

$$Ps_{III} = Kv_i\left(\frac{Rd_{max} + Ri_{max}}{2}\right)$$

Struts (horizontal) L = Y

$$Psh_{III} = Kv_i\ \frac{(Rh_{max.})}{4}$$

Determine:

Chords	- using Pc_I, Pc_{II}, Mc_{II}, Pc_{III}, Mc_{III}
Vertical diagonals	- using Pv_I, Pv_{II}, Pv_{III}
Horizontal diagonals	- using Pi_{II}, Pi_{III}
Vertical struts	- using Ps_I, Ps_{II}, Ps_{III}
Horizontal struts	- using Psh_{II}, Psh_{III}

SOUTH CAROLINA LICENSED PROFESSIONAL ENGINEER
No. 38665
DAVID A LALLONE

Sep 8 2023

Post Design Group I not critical, check Group II & III

W_v = Wind on Post = $(\frac{\text{Post OD}}{12})(H)(0.00256)(K_z)(G)(V^2)(I_r)(C_d)$

R_v = Weight of Post = $(H)\left[2(\text{Post Wgt/Ft}) + 1.414(\text{Diag Wgt/Ft}) + \frac{2 * Yu}{H}(\text{Strut Wgt/Ft})\right] + 400$ *

Yu = Y+ Chord OD + Post OD + 4" min. Note: Assume diagonals near 45°

* Indicates misc. (Base PL, Cap PL, etc...)

Group II (DL + W)

Combination 1

$$P_{IIA} = \frac{Rh_{max}(H) + Wv\left(\frac{H}{2}\right)}{Yu} + \frac{Rd + Rv}{2}$$

$$V_{IIA} = \frac{Rh_{max} + Wv}{2}$$

$$M_{IIA} = \frac{0.2\left[\frac{\sum WH_i}{2}(H) + W_v\left(\frac{H}{2}\right)\right]}{2}$$

Combination 2

$$P_{IIB} = \frac{0.6\left[Rh_{max}(H) + Wv\left(\frac{H}{2}\right)\right]}{Yu} + \frac{Rd + Rv}{2}$$

$V_{IIB} = 0.6\ (V_{IIA}) + 0.3\ (V_{IIA})$

$$M_{IIB} = \frac{0.3\left[\frac{\sum WH_i}{2}(H) + W_v\left(\frac{H}{2}\right)\right]}{2}$$

$P_{diag} = 2\ (V_{II})\ (1.414)$

$P_{str} = 2\ (V_{II})$

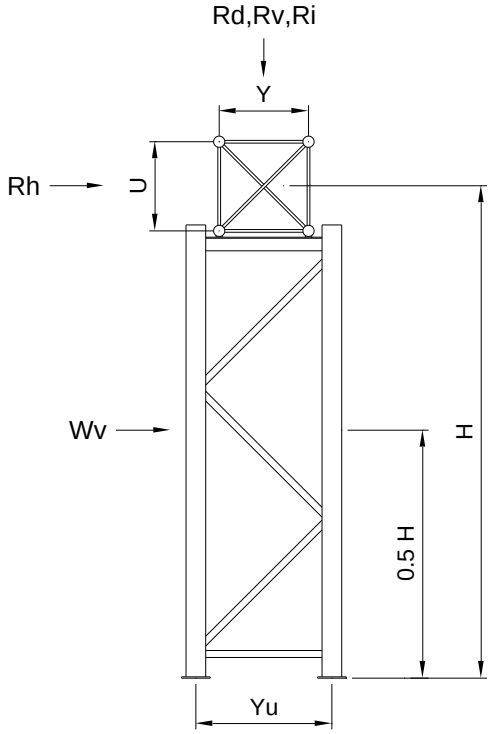

Group III (DL + 0.5W + IL) Loads per post

Combination 1

$$P_{IIIA} = \frac{0.5\left[Rh_{max}(H) + Wv\left(\frac{H}{2}\right)\right]}{Yu} + \frac{Rd + Rv + Ri}{2}$$

$V_{IIIA} = ½V_{IIA}$

$$M_{IIIA} = \frac{0.2\left[\frac{(0.5)\sum WH_i}{2}(H) + (0.5)W_v\left(\frac{H}{2}\right)\right]}{2}$$

Note

For upright, $\ell = H - \frac{U}{2}$

For diagonal, $\ell = 1414Yu$

For strut, $\ell = Yu$

SOUTH CAROLINA LICENSED PROFESSIONAL ENGINEER
No. 38665
DAVID A LALLONE

Sep 8 2023

Combination 2

$$P_{IIIB} = \frac{0.6\left[(0.5)Rh_{max}(H)+(0.5)Wv\left(\frac{H}{2}\right)\right]}{Yu} - \frac{Rd+Rv+Ri}{2}$$

$$V_{IIIB} = 0.6\ (0.50 * V_{IIA}) + 0.3\ (0.50 * V_{IIA})$$

$$M_{IIIB} = \frac{0.3\left[\frac{(0.5)\sum WH_i}{2}(H)+(0.5)W_v\left(\frac{H}{2}\right)\right]}{2}$$

$P_{diag} = 2\ (V_{III})\ (1.414)$

$P_{str} = 2\ (V_{III})$

Determine:

Upright	- using V, P, & M from Comb. 1 & 2 for each group
Diagonals	- using P_{diag} for each applicable group
Struts	- using P_{str} for each applicable group

SOUTH CAROLINA
LICENSED PROFESSIONAL ENGINEER
No. 38665
DAVID A LALLONE

Sep 8 2023

Anchor Bolt Design

Use loadings from Group II, (Maximum by inspection). See sheet F2B for material specifications.

Total shear per anchor bolt

Worst case if normal and transverse shear loads are combined.

$$V_{AB} = \frac{V_{IIB}}{4}$$

Total axial load per anchor bolt

$$P_{AB} = \frac{0.6\left[Rh_{max}(H) + Wv\left(\frac{H}{2}\right)\right]}{4\,(Yu)} + \frac{M_{IIB}}{(0.707)(BC) * \left(\frac{No\ Ab}{2}\right)} - \frac{Rd_{max} + Rv}{8} \qquad \text{where, } BC = \frac{OD + 6"\pm}{12}$$

Allowable Stresses

$F_v = 0.30\ F_y\,(j)$ (Eq 5.17.4.2-3) $F_t = 0.50\ F_y\,(j)$ (Eq 5.17.4.2-1)

Determine anchor thread diameter

$A_t = \frac{P_{AB}}{F_t}$ A_t = Actual tensile stress area required per bolt

A_{tt} = Tensile stress area for trial size bolt ($A_{tt} > A_t$)

Check for combined loading

$(f_v)^2 + (kf_t)^2 \le (F_v)^2$ $k = \frac{F_v}{F_t}$ $fv = \frac{V_{AB}}{A_{tt}}$ $ft = \frac{P_{AB}}{A_{tt}}$

Anchor bolt embedment length

Embedment length to be the greater of the development length for a non-contact lap splice if the anchor bolt is within 6" of the vertical reinforcement of the pedestal / cylinder or 20 anchor bolt diameters. Alternately the anchor bolt embedment will meet or exceed the requirements of Appendix D of ACI-318-08. All anchors bolts will have a nut at the bottom and be 55 ksi bolts unless otherwise specified. Note hooked anchor bolts only used if specified or required by job specifications.

SOUTH CAROLINA LICENSED PROFESSIONAL ENGINEER
No. 38665
DAVID A LALLONE

Sep 8 2023

Base Plate Design

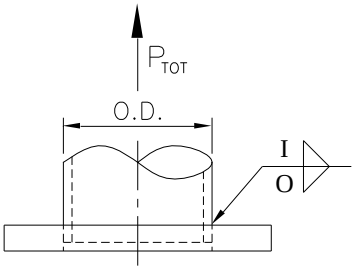

Below is the standard base plate design that will be used unless otherwise specified or indicated on design printouts and/or drawings.

Use ASTM A709, Grade 50 Plate (F_y=50,000 PSI)

Assume point of contraflexure midway between bolt and toe of weld.

$$e = \frac{1.414C - (OD - 2\,(0.313))}{4}$$

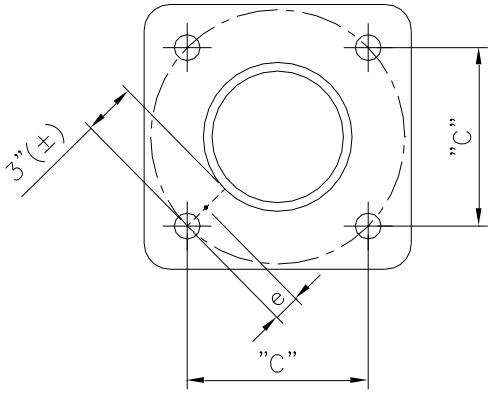

Allowable Stresses

Plate: Fb = 0.75 F_y (j) (Eq. 5.8-1)

Weld: Fv = 21.00 (j) AWS-2008 Table 2.3
page 25 - Ft_w = 70 ksi

Determine Plate Thickness

$M = (P_{AB})(e)$

$S = M/F_b$

$t = \sqrt{6\,S}$ (Base Plate thickness the greater of (t) or anchor bolt diameter)

Determine Weld

Design for P_{TOT} + Max Moment + Shear Load (for each post)

$$P_w = \sqrt{\left(\frac{P_{TOT}}{\pi(\text{pipe OD})} + \frac{M_{max\ res}}{\pi\left(\frac{\text{pipe OD}}{2}\right)^2} + \right)^2 + \left(\frac{V_{max\ res}}{\pi(\text{pipe OD})}\right)^2}$$

Inside weld capacity = I_v; $I_v = \pi(\text{Pipe OD})(\text{Max Weld Size})(0.707)(Fv)(j)$

Outside weld O_w; $O_w = \dfrac{Pw - I_v}{\pi(\text{Pipe OD})(0.707)(F_v)(j)}$ use $\frac{5}{16}$" minimum weld

Note:

Base plate width in both directions shall not be less than Bolt Circle.

Alternate Base Plate

If the required base plate exceeds 3" in thickness, the use of stiffeners extended beyond critical bending section will be used and the plate thickness re-sized, unless not allowed per project specifications. Use weld on stiffeners in addition to weld I and weld O to develop base connection.

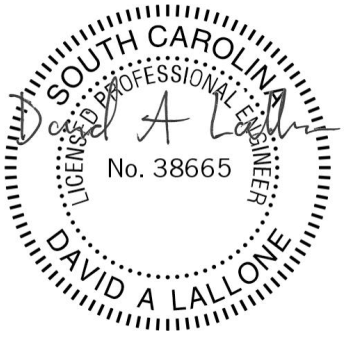

Sep 8 2023

Truss Connection to Upright

Check Group II and Group III loadings and use maximum.

Vertical load due to wind, $P = \frac{Rh_{max}(U)}{2Y}$

Load on truss seat, $P_{UB} = P + \frac{Rd_{max}}{2}$; $M_{truss\ seat} = P_{UB} * a$

Truss seat

Use WT6x13, WT7x15, WT8x18, W8x24, W8x31, or W10x45 as required.

Fb = (0.6 Fy)(1.33)

Weld Fv = 21000 psi (AWS-2008 Table 2.3 page 25 - Ft_w = 70000 psi minimum)

U-Bolts at chords (A307 U-bolts used unless otherwise specified, see drawings for actual)

Allowable shear stress, Fv = 11000 psi (AASHTO Table 10.32.3A)

Area of U-bolt required for tension, $At = \frac{P - \frac{Rd_{max}}{2}}{4(Fv)(j)}$, $f_t = \frac{P - \frac{Rd_{max}}{2}}{4(At)}$

Area of U-bolt required for shear, $Av = \frac{Rh_{max}}{8(Fv)(j)}$, $f_v = \frac{Rh_{max}}{8(At)}$ $k = \frac{Fv}{Ft}$

Check for combined stresses

$Fv^2 \geq (f_v)^2 + (kf_t)^2$

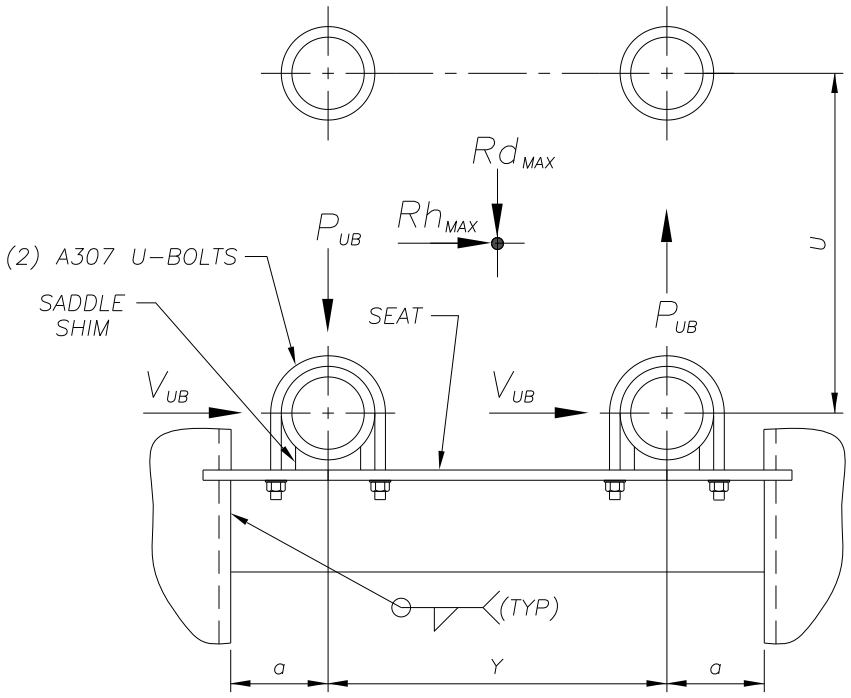

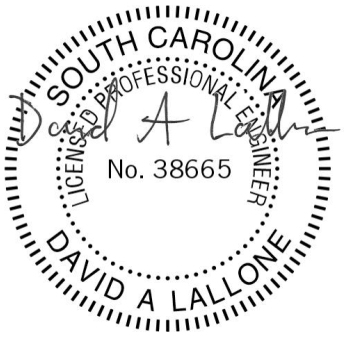

Sep 8 2023

Dead Load Deflection and Camber

Nomenclature

S = span
A = chord area
I_o = chord moment of inertia
U = truss depth
I = truss moment of inertia
C = camber
E = modulus of elasticity
Wd_i = load at any point
A_i = distance to load point
D = depth of deepest sign
ΔDL = truss dead load deflection

Truss deflection due to dead load

$$\Delta DL = \frac{1728\left[\sum_{i=1}^{M} WD_i\, A_i\,(3S^2 - 4A_i^2) + \sum_{i=M+1}^{N} WD_i\,(S - A_i)\{3L^2 - 4(S - A_i)^2\}\right]}{48EI}$$

Truss moment of inertia

$$I = 4\,(I_o) + 4\,(A)\left(\frac{U}{2}\right)^2$$

Limit for deflection

Deflection due to dead load and ice load shall be limited to

$$\Delta DL_{max} = \frac{L}{150}$$

Camber Used

$C_u = \frac{L - 50'}{5'}(0.25) + 1''$ (1" minimum), Then the number is rounded to the nearest 1/16 of an inch.

Permanent camber remaining

Minimum per AASHTO = L/1000 + DL deflection

No maximum used unless specified by job provisions

$C_p = C_u - \Delta DL$

SOUTH CAROLINA
LICENSED PROFESSIONAL ENGINEER
No. 38665
DAVID A LALLONE

Sep 8 2023

Member selection - Steel Pipe

Increase in allowable unit stresses from Table 3.4-1.

j = 1.33 for Group II and Group III
j = 1.0 for Group I
k = 1.0 for truss chords and web members, 1.0 for uprights

Allowable unit stresses

Bending: (In terms of radius)

compact - Fb = 0.66 Fy (j); if $\left[\frac{Fy}{E}\left(\frac{R}{t}\right)\right] \le 0.063$

non-compact - $Fb = \left[0.39 + 0.017\frac{E}{Fy}\left(\frac{t}{R}\right)\right](Fy)(j)$; $if\ 0.063 < \frac{Fy}{E}\left(\frac{R}{t}\right) < 0.13$

non-compact - $Fb = \left[0.39 + 0.017\frac{E}{Fy}\left(\frac{t}{R}\right)\right](Fy)(j)$; $if\ 0.13 < \frac{Fy}{E}\left(\frac{R}{t}\right)$

Shear: (Section 5.11.1 – round) (Based on radius of pipe)

Fv = 0.33 Fy (j) ; when $\left(\frac{Fy}{E}\right)\left(\frac{R}{t}\right)^{\frac{3}{2}} \le 0.44$

$Fv = 0.145\ E\left(\frac{t}{R}\right)^{\frac{3}{2}}$; when $\left(\frac{Fy}{E}\right)\left(\frac{R}{t}\right)^{\frac{3}{2}} > 0.44$

Axial compression: (Section 5.10)

$Fa = \left[\frac{0.52\pi^2 E}{\left(kl/r\right)^2}\right](j)$; if $\frac{kl}{r} > C_c$, where $Cc = \sqrt{\frac{2\pi^2 E}{Fy}}$

$$Fa = \left\{\frac{\left[1 - \frac{\left(kl/r\right)^2}{2C_c^2}\right]Fy}{\frac{5}{3} + \frac{3\left(kl/r\right)}{8C_c} - \frac{\left(kl/r\right)^3}{8C_c^3}}\right\}(j)\ ;\ \text{if}\ \frac{kl}{r} < C_c$$

Actual stresses

$fa = \frac{P}{A}$ A = area of trial member

$fb = \frac{M}{S}$ S = section modulus of trial member

$fv = \frac{V}{A}$

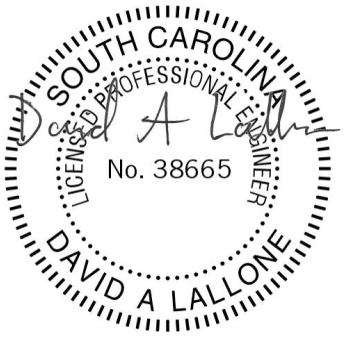

Sep 8 2023

Member selection - Steel Pipe (cont.)

Check for combined stresses. Below are the default CSR limits used unless noted in provisions.

For intermediate points of trusses and uprights $CSR \le 1.0$ (Eq. 5.12.2.1-2)

$$CSR = \frac{fa}{Fa} + \frac{fb}{\left(1 - \frac{fa}{F'_e}\right)Fb} + \left(\frac{fv}{Fv}\right)^2 \quad \text{, where } F'_e = \frac{12\pi^2 E}{23\left(kl/r\right)^2}$$

Trusses are checked for maximum axial load at the point of zero shear and maximum local moment due to load from hanger.

Uprights are checked for (loads) and lengths in panels of uprights where maximum conditions are located as illustrated below.

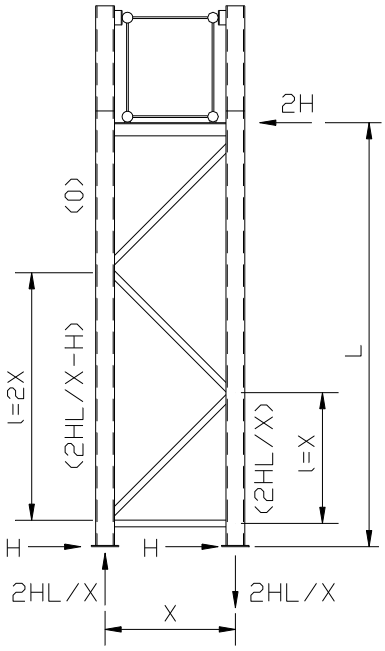

For end points of trusses and base of uprights $CSR \le 1.0$ (Eq. 5.12.2.1-1)

$$CSR = \frac{fa}{0.6Fy} + \frac{fb}{Fb} + \left(\frac{fv}{Fv}\right)^2$$

Trusses do not exhibit maximum conditions at ends for these types of structure therefore use previous equation.

Compare base CSR calculated here with CSR at intermediate points and use the maximum.

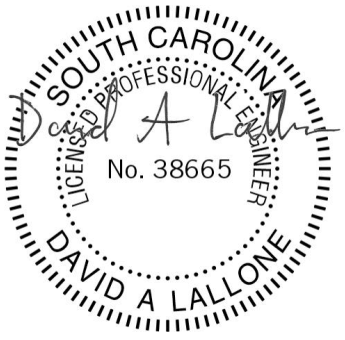

Sep 8 2023

Truss Splice Design (if required)

Below is the standard truss splice design that will be used unless otherwise specified or indicated on design printouts and/or drawings.

Design for the average of the maximum chord load and the strength of the member but not less than 75% of the strength of the member. (AASHTO 10.18.1)

Assume point of contraflexure midway between the bolt and toe of weld.
Use A709 Grade 50 Plate (Fy = 50000 psi)
Use ¼" minimum outside weld
Use A325 bolts (Ft = 38000 psi) (AASHTO Table 10.32.3B)
Bolt circle = OD + 3" (±)

Loads

$$P_{TOT} = \frac{\text{Max Chord "Pc"} + (A)(Fy_c)}{2} \quad \text{or} \quad (0.75)(A)(Fy_c), \text{ whichever is greater}$$

$$P = \frac{P_{TOT}}{\pi(OD)} \text{ kips / linear inch of circumference} \qquad e = \frac{BC - (OD + \frac{1}{2})}{4}$$

M = P * e kips / linear inch of circumference

Allowable Stresses

Plate - Fb = 0.750 (Fy) (j)
Weld - Fv = 21.60 (j)
Pipe - Ft = 0.660 (Fy) (j)

Determine bolts

$f_t = Ft(A_t)(j)$; A_t = tensile stress area

$$\text{No Req'd} = \frac{P_{TOT}}{f_t}$$

Determine plate thickness

$$S = \frac{M}{Fb} \text{ in}^3 \text{ / linear inch of circumference}$$

$$t = \sqrt{\frac{6\,S}{b}} \quad b = 1\text{" of circumference}$$

Determine weld

Iv = value of weld $I = \pi(OD)(\text{Pipe Thk})(0.707)(Fv)$

$$\text{Size of weld O} = \frac{P_{TOT} - Iv}{\pi(OD)(0.707)(Fv)} \quad ; \quad ¼\text{" minimum}$$

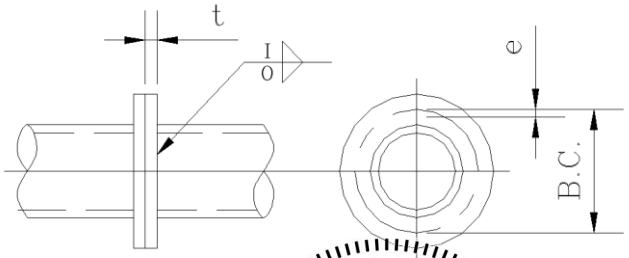



Sep 8 2023

Vibration and Fatigue Design

Overhead sign structure's shall be designed for fatigue to resist each of the applicable equivalent static wind load effects specified in Article 11.7, and modified by fatigue importance factors in Article 11.6, Table 11.6-1 page 11-5 of the specifications which states the structures should be checked for fatigue due to natural wind and truck induced wind gusts.

Because Vibration and Fatigue is subject to ongoing research by AASHTO / NCHRP, values shown in design may be based on most current AASHTO specification.

Natural Wind Gust

Each overhead structure will be designed to resist a static natural wind gust pressure range of 5.2 (C_d) (I_f) according to Article 11.7.1.2. The pressure is applied to the horizontal surface of the sign and structure.

Truck Induced Wind Gust

Each overhead structure shall be designed to resist the equivalent static truck wind gust pressure. The pressure range for truck-induced gust shall be 18.8 (C_d) (I_f) and adjusted for magnitude according to Article 11.7.1.3. The pressure is applied in the vertical direction to the horizontal surfaces of the sign, walkway, and truss. The pressure range shall be applied along any (12-ft) length to create maximum stress range, excluding any portion not directly over traffic lanes.

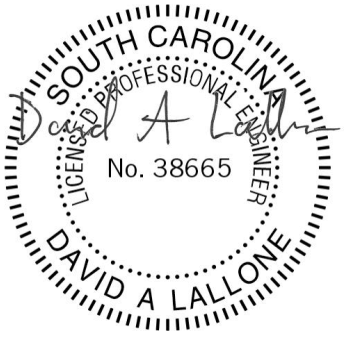

Sep 8 2023

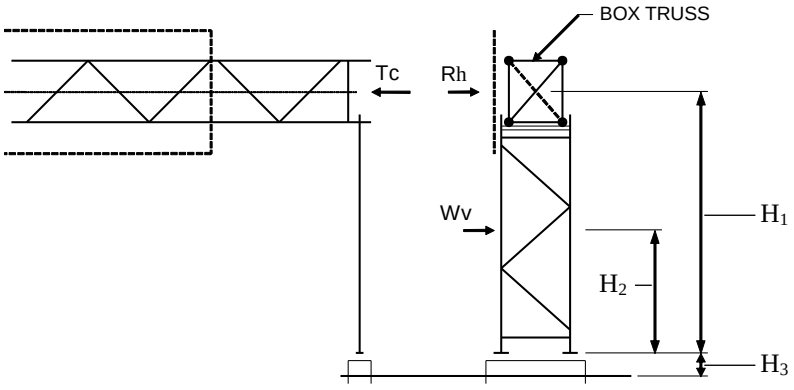

Tc = Transverse component of wind = 0.2(Rh + Wv)
Rh = Wind on sign and truss
Wv = Wind on upright
DL = Dead load = (Rd + Rv)

NOTE: Loads in kips & dimensions in feet

SOUTH CAROLINA
LICENSED PROFESSIONAL ENGINEER
No. 38665
DAVID A LALLONE

Sep 8 2023

CALCULATION OF FOOTING CORNER STRESSES

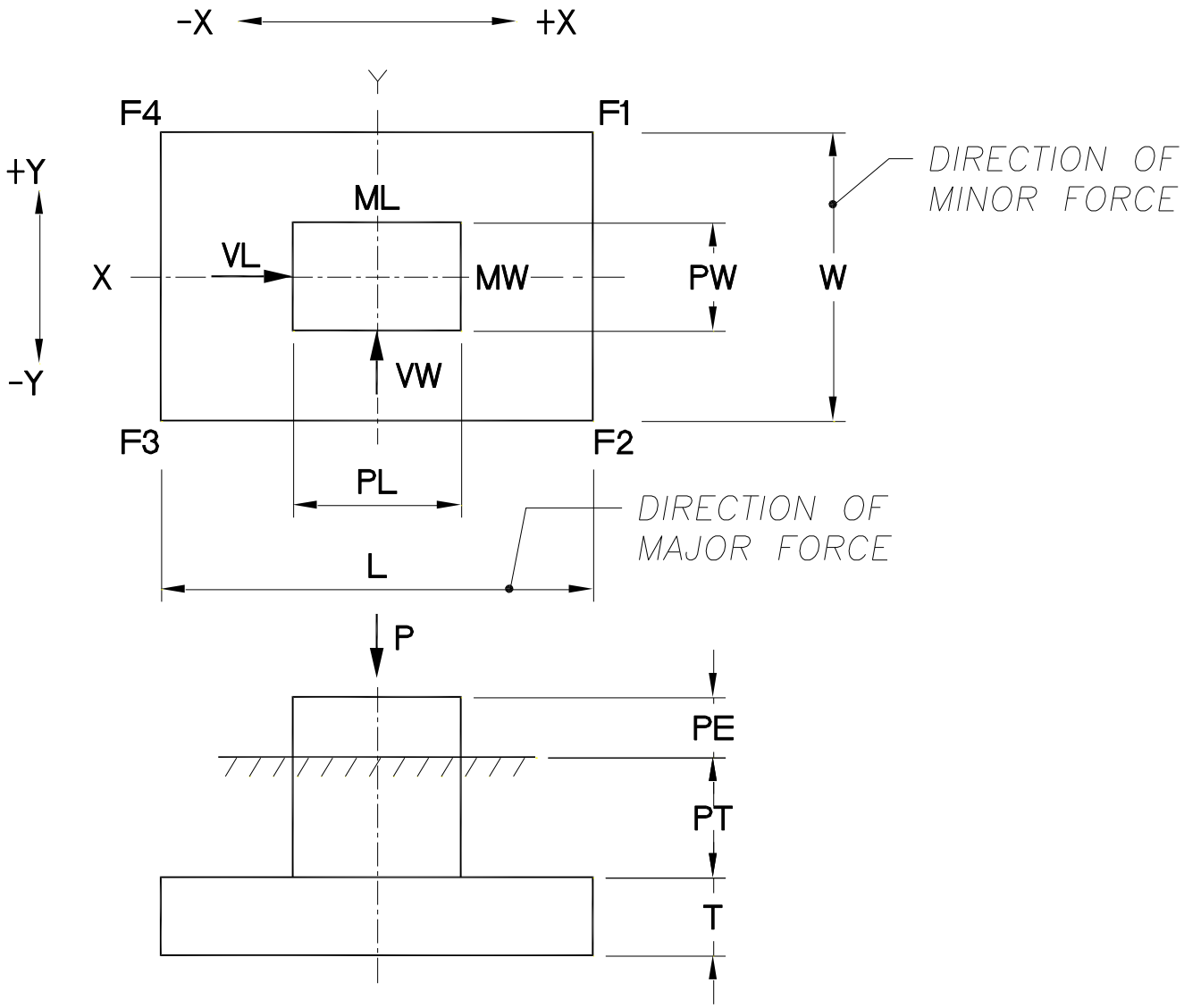

FOOTING SIZE

Wc = WEIGHT OF CONCRETE = 150 LBS / CUBIC FOOT ASSUMED

Ws = WEIGHT OF SOIL

INPUT VALUES ARE AT TOP OF PEDESTAL

SOUTH CAROLINA LICENSED PROFESSIONAL ENGINEER
No. 38665
DAVID A LALLONE

Sep 8 2023

Uncracked Section (No Tension)

$$F_i = \frac{P_t}{A} \pm \frac{Mx(y)}{Ix} \pm \frac{My(x)}{Iy}$$

P_s = weight of soil above pad
P_c = weight of concrete
P = weight of structure

Axial load at bottom of footing, $P_t = P + P_c + P_s$

Moments at bottom of footing

$Mx = Mw + Vw\ (T + PT + PE)$
$My = M_L + V_L\ (T + PT + PE)$

Footing corner stresses

$$F1 = \frac{P_t}{A} + \frac{Mx(y)}{Ix} + \frac{My(x)}{Iy}$$

$$F2 = \frac{P_t}{A} - \frac{Mx(y)}{Ix} + \frac{My(x)}{Iy}$$

$$F3 = \frac{P_t}{A} - \frac{Mx(y)}{Ix} - \frac{My(x)}{Iy}$$

$$F4 = \frac{P_t}{A} + \frac{Mx(y)}{Ix} - \frac{My(x)}{Iy}$$

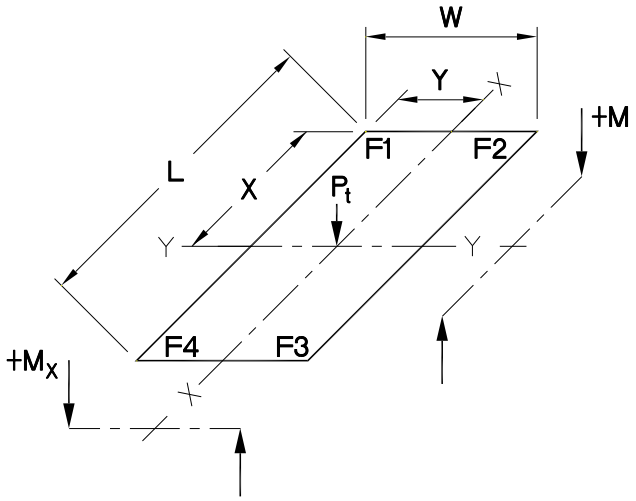

DESIGN MODEL AT BOTTOM OF FOOTING

Note: If F3 is negative (in tension), cracked section must be calculated

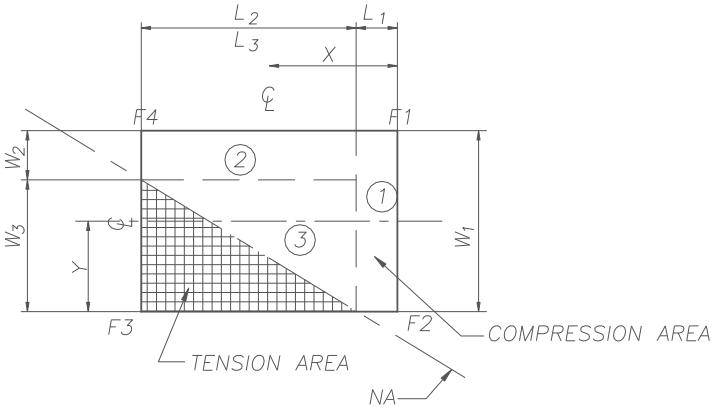

STRESS DIAGRAM - F3 NEGATIVE
Cracked Section - Case 1
Stresses are calculated at bottom of footing

General Flexure Formula

$$F_i = \frac{P_t}{A} \pm \left[\frac{Mxc - Myc\left(\frac{Ixcyc}{Iyc}\right)}{Ixc - \frac{(Ixcyc)^2}{Iyc}}\right]Y' \pm \left[\frac{Myc - Mxc\left(\frac{Ixcyc}{Ixc}\right)}{Iyc - \frac{(Ixcyc)^2}{Ixc}}\right]X'$$

SOUTH CAROLINA LICENSED PROFESSIONAL ENGINEER
No. 38665
DAVID A LALLONE

Sep 8 2023

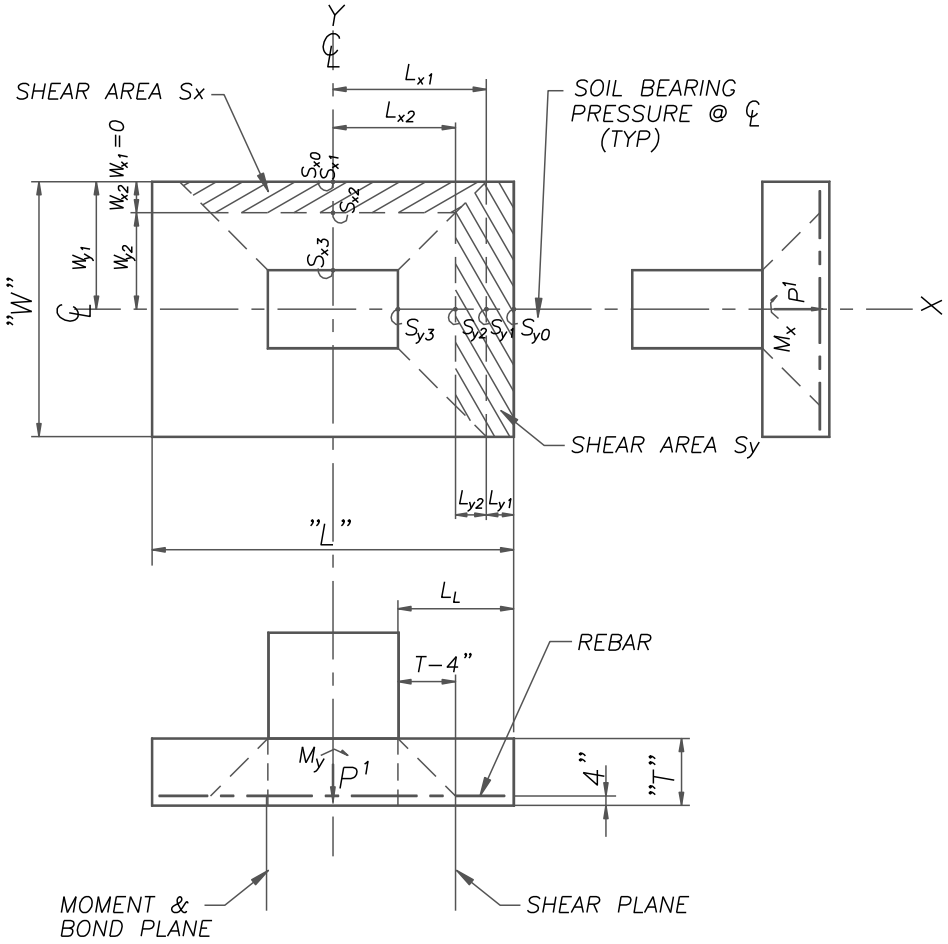

FOOTING MOMENT AND SHEAR MODEL

Uniform weight of concrete and soil, Pcs = (T) (Wc) + (PT) (Ws)

SOUTH CAROLINA LICENSED PROFESSIONAL ENGINEER
No. 38665
DAVID A LALLONE

Sep 8 2023

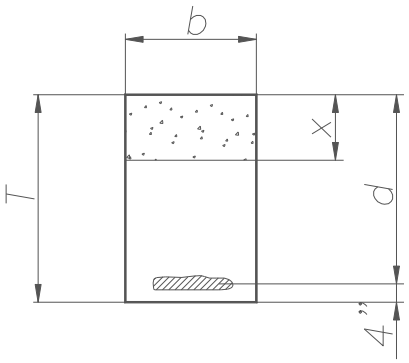

Use ASTM A615, Grade 60 rebar

Fy = 60 ksi f 'c = varies (psi)

Fs = 24 ksi $n = \frac{E}{57000\sqrt{f'c}}$

Increase allowable stresses 133%.

Trial:

Balance areas so that $x = \frac{3}{8}d$

Ms = Myy or Mxx

$Ast = \frac{12(Ms)}{(d - \frac{x}{3})(Fs)(1.33)}$ $ld_m = \frac{(0.05)(d_b)(Fy)}{\sqrt{f'c}}$

Check concrete stresses

Allowable stresses:

$f_{cr} = (0.4)(f'c)(1.33)$

$v_{cr} = (0.95\sqrt{f'c})(1.33)$

$p = \frac{Ast}{bd}$ $k = \sqrt{2np - (np)^2} - np$

$j = 1 - \frac{k}{3}$

Actual stresses:

$f_{ca} = \frac{12(Ms)}{(b)(k)(j)(d)^2(0.5)}$

$v_{ca} = \frac{Vs}{(b)(j)(d)}$

Vs = DTSy or DTSx

Check development length (Bond)

$ld_r = \frac{Mt}{(2)(Vs)} + la$ (la = 0)

Mt = (Ast) (Fy) (0.85) (d)

ld_a = LL - 3" or WW - 3"

Recheck As

$As_r = \frac{(12)(Ms)}{(j)(d)(Fs)(1.33)}$

Note: The area of steel does not include the steel located in the top of pad. That steel is shown to account temperature only.

SOUTH CAROLINA LICENSED PROFESSIONAL ENGINEER
No. 38665
DAVID A LALLONE

Sep 8 2023

DESIGN OF PEDESTAL WITH BI-AXIAL BENDING

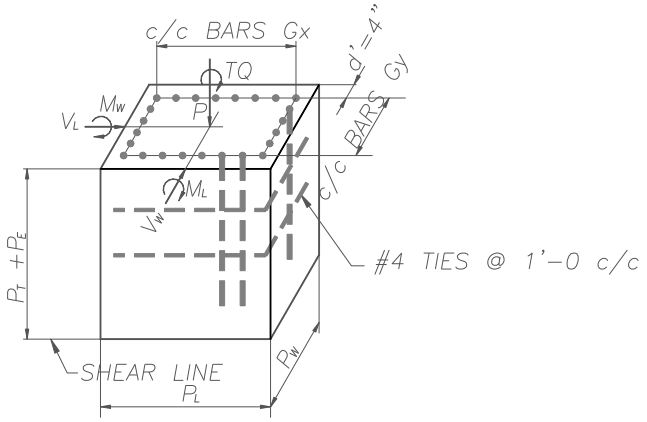

d' = 3"(cover) +
½ (#4 Tie) +
½ (½ of #8 bar) assumed +
4"

Minimum Reinforcement (1%)

Asm = (0.01) (PL) (PW) (144) in^2

DESIGN MODEL

Moments at base

My = M_L + V_L (PT + PE)
Mx = Mw + Vw (PT + PE)

Shear at base (acting on rebar only)

$V_1 = \sqrt{VL^2 + VW^2}$

$V_2 = \frac{TQ}{Gx} + \frac{TQ}{Gy}$

$V_t = V_1 + V_2$

Trial reinforcing (Assume #8 bar - 0.79 in^2)

$Qty = \frac{Asm}{0.79}$

Combined stress ratio

$CSR = \left(\frac{fv}{Fv}\right)^2 + \frac{fa}{Fa} + \frac{fbx}{Fbx} + \frac{fby}{Fby} \le 10$

Allowable stress (increase by 33%)

Fv = (0.33) (Fy) (1.33) = 26334 psi
Fa = (0.4) (f 'c) (1.33)
Fbx = Fby = (0.4) (f 'c) (1.33)

SOUTH CAROLINA
LICENSED PROFESSIONAL ENGINEER
No. 38665
DAVID A LALLONE

Sep 8 2023

Actual Stress

$$fv = \frac{Vt}{Ast} \qquad fa = \frac{P}{Ag} \qquad fbx = \frac{(Mx)(Cx)}{Ix} \qquad fby = \frac{(My)(Cy)}{Iy}$$

Ast = area of reinforcement used
Ag = gross area of pedestal

$$Cx = \frac{PL}{2} \qquad Cy = \frac{PW}{2}$$

$$Ix = \frac{(PW)(PL)^3}{12} + \frac{(2n)(Ast)(Gx)^2}{6}$$

$$Iy = \frac{(PL)(PW)^3}{12} + \frac{(2n)(Ast)(Gy)^2}{6}$$

Since the pedestal is almost in pure bending (P load is negligible), the following stress ratio must be used.

$$CSM = \frac{Mx}{Mo_x} + \frac{My}{Mo_y} \le 1.0$$

Mo_x = (0.40) (As) (Fy) (1.33) (PW - 2d')

Mo_y = (0.40) (As) (Fy) (1.33) (PL - 2d')

As = tension steel = $\frac{Ast}{4}$

Review CSR and CSM and adjust rebar size if required

SOUTH CAROLINA LICENSED PROFESSIONAL ENGINEER
No. 38665
DAVID A LALLONE

Sep 8 2023

NOTE: Loads in kips, dimensions in feet

$M_{TL} = (Tc)(H_1 + H_3)$ $M_{WL} = (Rh)(H_1 + H_3) + (Wv)(H_2 + H_3)$ $Mr = \sqrt{M_{WL}^2 + M_{TL}^2}$

$P_{WL} = Rh + Wv$

$$\text{Eff H} = \frac{M_{WL}}{P_{WL}}$$

Use Eff H to determine effective P_{TL}

$$P_{TL} = \frac{M_{TL}}{\text{Eff H}}$$

$$P = \sqrt{(P_{TL})^2 + (P_{WL})^2}$$

$$D = \frac{2.37\,P + \sqrt{5.617\,P^2 + 10.56\,(S_1\,b * P * H)}}{2\,S_1\,b}$$

$$\text{Wt of concrete, Wc} = \frac{b^2}{4} * \pi * (D + H_3) * 0.15$$

Effective OT Moment = Mr - (Wc + 0.5 DL)(C)

Determine Effective P based on Effective OT Moment

$$\text{Eff P} = 0.75\left(\frac{\text{Eff OT Mom}}{\text{Eff H}}\right)$$

Recalculate required depth D based on Eff P and Eff H

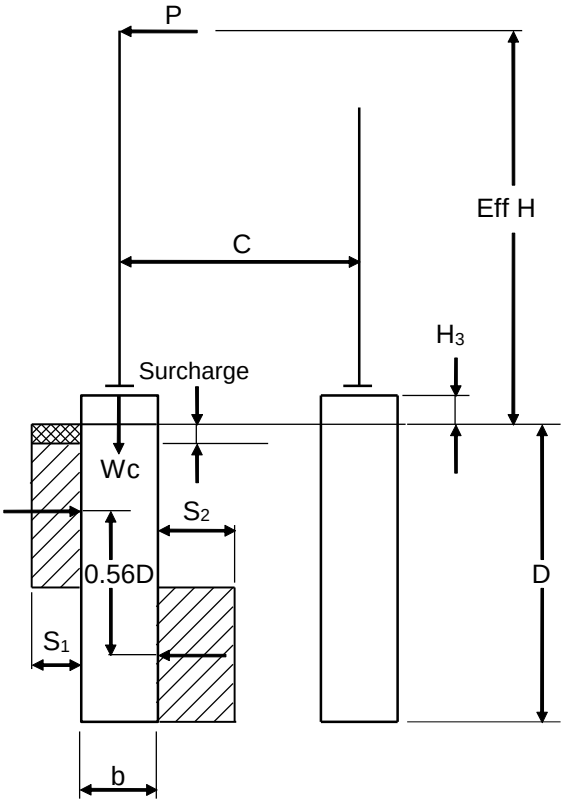

REINFORCING

MR = (Eff P) (Eff H)

Fy = Rebar yield (KSI)
Ab = Area of single bar (in^2)
As = Req'd area of reinforcement ($in.^2$)
D_1 = Diameter of rebar cage (in.)
J = 1.33 for Group II only

$$\text{As} = \frac{12\,(MR)}{0.12\,(Fy)\,(D_1)\,(J)} \geq 1\%\ \text{Cylinder Area}$$

$$\text{Number of bars req'd} = \frac{As}{Ab}$$

$$\text{Spacing} = \frac{\pi\,D_1}{\text{No of bars}}$$

The use of #4 hoops @ 1'-0 (±) c /c will be used for cylinder diameters 4 ft and less. #5 hoops for cylinders larger than 4 ft, unless otherwise specified on the printouts.

SOUTH CAROLINA LICENSED PROFESSIONAL ENGINEER
No. 38665
DAVID A LALLONE

Sep 8 2023

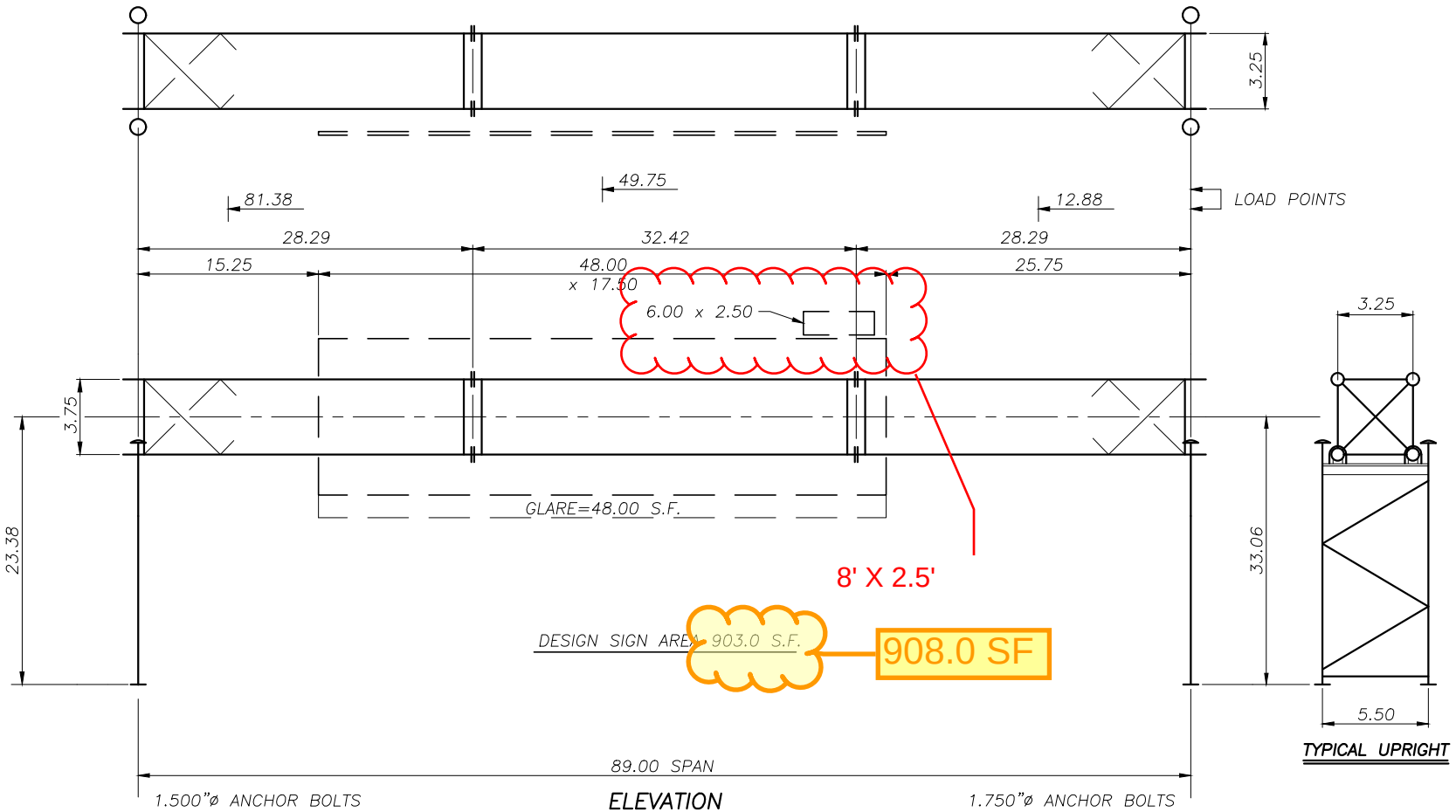

ELEVATION

STR NO: OH-12
STA NO: 414+73.64(EB)

TRUSS:	CHORDS	6.625 x 0.250
	VERT DIAGONALS	1.900 x 0.200
	HORIZ DIAGONALS	1.900 x 0.200
	STRUTS	1.660 x 0.140
	INT DIAGONALS	1.660 x 0.140

UPRIGHTS:	LEFT POSTS	12.750 x 0.250
	STRUTS & DIAGONALS	3.500 x 0.188
	RIGHT POSTS	14.000 x 0.250
	STRUTS & DIAGONALS	3.500 x 0.188

SOUTH CAROLINA
LICENSED PROFESSIONAL ENGINEER
No. 38665
DAVID A LALLONE

Oct 25 2023

Subject Box Truss Design Information Sheet BT7
Job No C3546 By IWL Date 8/24/23
GROUP 2 Chk'd By RRW Date 9/13/23

Box Truss Double Pole Structure Design

Reference Walpar Job Number C3546
Reference Design Information Sheet Number BT7 Structure : OH-12 Station : 414+73.64(EB)
State SC
AASHTO Specification 6th Edition Fatigue Category : II
Design Wind Velocity (V) 100 mph

Structure Dimensions

Span (S)	89.00 ft	Truss Hgt (U)	3.75 ft	Truss Depth (Y)	3.25 ft
End Section Length	29.29 ft	Middle Section Length	32.42 ft	Coeff of Hgt (Kz)	1.05
Left Upright Hgt (H)	23.38 ft	Right Upright Hgt (H)	33.06 ft	Center to center of upright posts (Yu)	5.50 ft

Sign Information **Design Sign Area: 903.00 sq ft**

Z Ecc to bottom of Glare Screen

Sign	Load (i)	Lgth (B_i)	Hgt (D_i)	Location (a_i)	Unit Wgt	Depth	C_d	Front/Back	Z Ecc	Area	Exit Panel
1	2	48.00	17.50	49.75	7.00		1.19	F	9.75	903.0	X

908.0 SF

Walkway Information

	Lgth	Location	Width	Unit wgt	Y Ecc
WW1	50.75	48.38	2.54	65	5.56

Load Summary Estimate for Field Use Only

(Distance from right end of assembled truss)

Weight of truss only	8666 lbs
Weight of erected signs & WW	7166 lbs
Center of erected sign & WW+truss load	47.68 ft
Front to Back Overturning on Truss	27117 ft-lbs
Max upright weight	3144 lbs
Max truss section weight	3171 lbs

SOUTH CAROLINA LICENSED PROFESSIONAL ENGINEER
David A Lallone
No. 38665
DAVID A LALLONE

Oct 25 2023

0

Walpar © 2014

Box Truss Double Pole Structure Design

Job No : C3546 Structure No : OH-12 Station : 414+73.64(EB)

Loads

Unit wind load on sign(s)/C_d: 30.64 psf Unit wind load on exposed truss: 36.77 psf Unit wgt of truss: 90.51 plf Unit ice wgt on truss: 30.61 plf

Truss Area for Wind Load (A_t): 1.60 sq ft / ft ***All loads in charts in lbs, ft or ft-lbs unless noted**

Truss Load Summary For Actual Sign & WW Condition

	Load (i)	Dead	Wind (W_p & W_h)	Ice
Sign and Truss Loads Ref: (BT7)	1	2331	1513	788
	2	10666	32965	4178
	3	1380	896	467
WW Loads	WW1	3299	1138	1354
Left Reaction (R_L)		9354	20084	3613
Right Reaction (R_R)		8321	16429	3175
Maximum Moments (M)		242821	559021	95041
Point of "0" shear (A_m)		45.99	46.69	46.09

** WW/EQ Loads are incorporated into Sign and Truss Loads to determine Reactions and Moments

Serviceability Requirements

Truss DL + IL Deflection	1.76 in
Limit for Deflection	7.12 in
Camber Used (Cu)	3.00 in
Permanent Camber (Cp)	1.73 in

SOUTH CAROLINA LICENSED PROFESSIONAL ENGINEER David A Lallone No. 38665 DAVID A LALLONE

Oct 25 2023

Post Loads

	Dead	Wind	Ice	Group II t_c	Group III t_c	Lateral Stiffness Ratio
Left Upright	2203	952	576	208	312	0.70
Right Upright	3144	1365	870	309	464	0.30

Walpar © 2014

Box Truss Double Pole Structure Design

Job No : C3546 Structure No : OH-12 Station : 414+73.64(EB)

Load Combinations for Design Sign Area

Truss Member Loads	DL	DL +WL	DL+1/2 WL+IL
Truss Chords (Pc)	41254	127257	100641
Vertical Diagonals (Pv)	10791	11351	14828
Horizontal Diagonals (Ph)	3822	19946	12975
Vertical Struts (Psv)	7516	5067	6821
Horizontal Struts (Psh)	2460	12840	8353
Truss Moments			
Truss Chords (XMc)	1377	6695	4075

Upright Member Loads	Upright Loads					Web Member Loads	
Left Upright	M_N	M_{tc}	V_N	V_{tc}	Axial	Diagonals	Struts
Group II Comb. 1 (DL+WL)	481071	87882	21036	3859	11557	31160	22034
Group III Comb. 1 (DL+1/2WL+IL)	240536	43941	10518	1930	15746	15580	11017
Group II Comb. 2 (DL+WL)	288643	131823	12622	5789	11557	20071	14192
Group III Comb. 2 (DL+1/2WL+IL)	144321	65911	6311	2894	15746	10036	7096
Right Upright							
Group II Comb. 1 (DL+WL)	589655	125984	17793	3960	11465	26571	18789
Group III Comb. 1 (DL+1/2WL+IL)	294828	62992	8897	1980	15510	13286	9394
Group II Comb. 2 (DL+WL)	353793	188976	10676	5941	11465	17576	12428
Group III Comb. 2 (DL+1/2WL+IL)	176897	94488	5338	2970	15510	8788	6214

Material Information

	Pipe Size (Min Yield)	Unbraced Length	CSR Group II	CSR Group III
Truss Chords	6.625 x 0.250 (52 ksi)	7.73 ft	0.95	0.71
Vertical Diagonals	1.900 x 0.200 (52 ksi)	5.38 ft	0.61	0.80
Vertical Struts	1.660 x 0.140 (52 ksi)	3.75 ft	0.30	0.41
Horizontal Diagonals	1.900 x 0.200 (52 ksi)	5.05 ft	0.95	0.62
Horizontal Struts	1.660 x 0.140 (52 ksi)	3.25 ft	0.69	0.45

	Pipe Size (Min Yield)	Unbraced Length	CSR (Comb. 1) Group II	CSR (Comb. 1) Group III	CSR (Comb. 2) Group II	CSR (Comb. 2) Group III
Left Upright Posts	12.750 x 0.250 (52 ksi)	21.22 ft	0.64	0.34	0.74	0.39
Left Upright Diagonals	3.500 x 0.188 (52 ksi)	5.95 ft	0.52	0.26	0.33	0.17
Left Upright Strut	3.500 x 0.188 (52 ksi)	4.44 ft	0.33	0.16	0.21	0.11
Right Upright Posts	14.000 x 0.250 (52 ksi)	30.91 ft	0.72	0.37	0.85	0.44
Right Upright Diagonals	3.500 x 0.188 (52 ksi)	6.33 ft	0.45	0.23	0.30	0.15
Right Upright Strut	3.500 x 0.188 (52 ksi)	4.33 ft	0.28	0.14	0.18	0.09

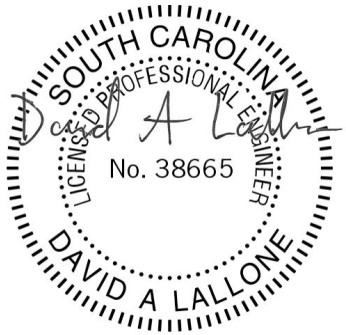

Oct 25 2023

0

BT7 - 3 of 13

Walpar © 2014

Box Truss Double Pole Structure Design

Job No : C3546 Structure No : OH-12 Station : 414+73.64(EB)

Structure Detail Information

Truss Chord Splices

Maximum Design Load at Splice	149481 lbs
Splice Moment (per inch of circum)	4489 in-lbs
Splice Bolt Circle	9.5 in.
Splice Bolt Qty & Size	6 - 1" ø A325
Splice Plate Thickness	1.0 in.
Splice Plate Weld	¼ fillet

Upright Detail	Left	Right
Maximuim Anchor Bolt Pullout	44653 lbs	58033 lbs.
Anchor Bolt Spacing	13.5 in.	14 in.
Anchor Bolt Yield	55 ksi	55 ksi
Anchor Bolt Qty & Size (ea pole)	4 - 1.5" ø	4 - 1.75" ø
Anchor Bolt Length (Embed)	4.50 ft (3.5 ft)	4.50 ft (3.5 ft)
Anchor Bolt CSR	0.75	0.70
Base Plate Thickness	1.5 in.	1.75 in.
Base Plate Weld	5/16 fillet	5/16 fillet
Truss Seat	WT7x15	WT6x13
Truss Connection U-Bolts	5/8" ø	5/8" ø

Structure Input (For Foundation Designs)

	Left	Right
Truss DL React (Rd)	12.19 k	10.64 k
Upr DL React (Rv)	2.20 k	3.14 k
Truss WL React (Rh)	19.98 k	16.36 k
Upr WL React (Wv)	0.95 k	1.36 k
Distance To Rh (H1)	23.38 ft	33.06 ft
Distance To Wv (H2)	12.63 ft	17.47 ft
Min Ped Lgth (PL)	7.75 ft	8.00 ft
Min Ped Wth (PW)	2.25 ft	2.50 ft

Sign Hanger Detail

Design hanger spacing 9.00 ft

Sign Hanger U-Bolt type ASTM-A307

SIGN	Max UBL at End	Max Spacing	Hanger U-Bolt	Sign Hanger	Hanger Support
1	6.48 ft	9.00 ft	2 - ½" ø	L5x3x5/16	W6x9

SOUTH CAROLINA LICENSED PROFESSIONAL ENGINEER
David A Lallone
No. 38665
DAVID A LALLONE

Oct 25 2023

0

BT7 - 4 of 13

Walpar © 2014

Box Truss Double Pole Structure Design

Job No : C3546 Structure No : OH-12 Station : 414+73.64(EB)

Vibration and Fatigue (Per AASHTO 6th Edition)

Natural Wind Gust Load on Sign(s)/C_d	4.42 psf	Truck Induced Gust Load on Truss	10.52 psf
Natural Wind Gust Load on Truss	5.30 psf	Extent of Truck Induced Gust	12.00 ft
		Truss Area for Truck Induced Gust	1.56 sq ft / ft
		Location of Center of Truck Induced Gust	44.50 ft

Truck Induced Gust Loading

ID	P_{TG} (Uplift)	P_{TG} Torque	Location
Truss Chords	197		44.50
SIGN 1 (PARTIAL)			44.50
Walkway	1265	1876	44.50
Left Reaction	731		
Right Reaction	731		
Maximum Moments	30348		

Truss Load Summary for Natural Wind

LOADS (i)	$P_{NWG(i)}$
1	218
2	4502
3	129
Left Reaction	2756 lbs
Right Reaction	2258 lbs
Maximum Moments	76584 ft-lbs

Load Combinations for Vibration and Fatigue

Truss Members	P_{NWG}	P_{TG}
Truss Chords	11782	4046
Vertical Diagonals		525
Horizontal Diagonals	1070	
Vertical Struts		366
Horizontal Struts	689	
Upright Members		
Left Post	11712	366
Right Post	13575	366

Vibration and Fatigue Stresses

	NWG (ksi)	TIG (ksi)	Allowable (ksi)	
Truss Vertical Diagonals		0.49	1.20	
Truss Horizontal Diagonals	1.00		1.20	
Truss Vertical Struts		0.55	1.20	
Truss Horizontal Struts	1.03		1.20	
Truss chord at web members	0.72	0.81	4.50	
Upright Base Connection LT	1.19	0.04	2.60	Socket Connection Base Detail
Upright Base Connection RT	1.26	0.03	2.60	Socket Connection Base Detail
Anchor bolts - LT	2.08		7.00	
Anchor bolts - RT	1.79		7.00	

SOUTH CAROLINA LICENSED PROFESSIONAL ENGINEER
David A Lallone
No. 38665
DAVID A LALLONE

Oct 25 2023

0

BT7 - 5 of 13

Walpar © 2014

Box Truss Double Pole Structure Design

Job No : C3546 Structure No : OH-12 Station : 414+73.64(EB)

Left Foundation Design

Boring Type SPT Boring Designation G-112
Major Soil Type Cohesionless Depth to Water NA Surcharge (Frost) Depth 2 ft
Ground Slope 0:1 Consider slope stability? N

SOIL TYPES	
01-GP	07-SM
02-GW	08-ML
03-GM	09-MH
04-GC	10-SC
05-SP	11-CL
06-SW	12-CH

Soil Properties

Depth	N Value	γ' (pcf)	Φ (deg)	S_u (lbf/ft^2)	α	β	f_{SN} (lbf/ft^2)	$(N_1)_{60}$	Soil Type
**0 - 2	25	113	37			1.20	183	50	07
2 - 4	20	125	30	2500			228	40	11
4 - 6	32	137	32	4000	0.55		392	64	11
6 - 8	24	129	31	3000	0.55		390	48	11
8 - 10	40	120	37			1.10	411	56	07
10 - 17.6	12	106	32			0.80	637	14	07
17.6 - 35	12	106	30			0.74		10	07

* Soil Type 13 indicates rock layer with N>60 for cohesionless soil or N>40 for cohesive soils
**Top 2.0 ft of soil will not contribute to load resistance.

Soil Bearing Capacity for Left Spread Footing Design

Footing width, B 11.00 ft
Footing length, L 22.00 ft
Eccentricity, e_L 3.82 ft
Eccentricity, e_B 0.78 ft
Effective ftg width, B' 9.44 ft
Effective ftg width, L' 14.37 ft

Total wgt of load, foundation and soil, Pt 125.52 k
Normal moment, ML 478.96 ft-k
Transverse moment, Mw 97.84 ft-k
Distance from ground to bottom of footing, d_{min} 3.00 ft
Distance from ground to bottom of footing, D_f 3.00 ft
Distance to ground water from bottom of ftg, z_w N.A.
Overburden pressure at base of footing, q 0.36 ksf
Weighted average soil unit weight below pad, γ 120 pcf

Ultimate bearing capacity, q_{ult} 60.00 ksf
Allowable Bearing Capacity 20.75 ksf
Bearing Capacity used *** 2.00 ksf

***Note: Bearing capacities greater than 4.0 ksf will rarely effect spread footing pad size



Oct 25 2023

0

Walpar © 2014

Box Truss Double Pole Structure Design

Job No : C3546 Structure No : OH-12 Station : 414+73.64(EB)

Right Foundation Design

Boring Type SPT Boring Designation G-114
Major Soil Type Cohesionless Depth to Water NA Surcharge (Frost) Depth 2 ft
Ground Slope 6:1 Consider slope stability? N

SOIL TYPES	
01-GP	07-SM
02-GW	08-ML
03-GM	09-MH
04-GC	10-SC
05-SP	11-CL
06-SW	12-CH

Soil Properties

Depth	N Value	γ' (pcf)	Φ (deg)	S_u (lbf/ft^2)	α	β	f_{SN} (lbf/ft^2)	$(N_1)_{60}$	Soil Type
**0 - 2	10	105	33			0.87	271	20	07
2 - 4.5	8	104	32			0.67	459	16	07
4.5 - 6	9	105	32			0.71	2964	18	07
6 - 8	7	104	31			0.53	2648	12	07
8 - 10	6	103	30			0.44	1229	9	07
10 - 35	6	103	28			0.38	1314	6	07
							1677		

* Soil Type 13 indicates rock layer with N>60 for cohesionless soil or N>40 for cohesive soils
**Top 2.0 ft of soil will not contribute to load resistance.

Soil Bearing Capacity for Right Spread Footing Design

Footing width, B 11.00 ft
Footing length, L 21.00 ft
Eccentricity, e_L 3.83 ft
Eccentricity, e_B 0.80 ft
Effective ftg width, B' 9.41 ft
Effective ftg width, L' 13.34 ft

Total wgt of load, foundation and soil, Pt 147.39 k
Normal moment, ML 564.74 ft-k
Transverse moment, Mw 117.20 ft-k
Distance from ground to bottom of footing, d_{min} 3.58 ft
Distance from ground to bottom of footing, D_f 4.50 ft
Distance to ground water from bottom of ftg, z_w N.A.
Overburden pressure at base of footing, q 0.47 ksf
Weighted average soil unit weight below pad, γ 103 pcf

Ultimate bearing capacity, q_{ult} 24.62 ksf
Allowable Bearing Capacity 8.00 ksf
Bearing Capacity used *** 2.00 ksf

***Note: Bearing capacities greater than 4.0 ksf will rarely effect spread footing pad size



Oct 25 2023

0

BT7 - 7 of 13

Walpar © 2014

Box Truss Double Pole Structure Design

Job No : C3546 Structure No : OH-12 Station : 414+73.64(EB)

Left Upright Spread Footing Design

Material/Soil Specifications and Safety Factors

Concrete f'_c :	3000 psi	Concrete wgt :	150 pcf
Rebar yield f_y :	60000 psi	Rebar F_s :	24000 psi
Soil Bearing Capacity :	2000 psf	Soil unit wgt :	110 pcf

Load Safety Factor[1] : 1.15

Loads and Locations From Structure

Truss DL React (Rd)	12.19 k	Base to Truss Load Dim (H1)	23.38 ft
Upright DL React (Rv)	2.20 k	Base to Upright Load Dim (H2)	12.63 ft
Truss WL React (Rh)	19.98 k	Total DL React (DL)	14.40 k
Upright WL React (Wv)	0.95 k	Transverse Wind Component (tc)	4.19 k

Loads at Top of Pedestal from Structure

Axial load (P)	14.40 k		
Moment (ML)	478.96 ft-k	Moment (Mw)	97.84 ft-k
Shear (VL)	20.93 k	Shear (Vw)	4.19 k

Final Spread Footing Design Sizes

Pad Length (L)	22.00 ft	Pedestal Width (PW)	2.25 ft
Pad Width (W)	11.00 ft	Pedestal Length (PL)	7.75 ft
Pad Thickness (T)	1.50 ft	Pedestal Projection at Ctr (PE)	6.00 ft
		Ground line to top of pad (PT)	1.50 ft

Reinforcement

Pad	Pedestal
Top each way - #4 Bars @ 12" o.c.	4 ea. - #8 Vert. Bars @ 6.33" o.c. @ Ends
X Direction - 11 - #9 Bars @ 12.00" o.c.	12 ea. - #8 Vert. Bars @ 6.54" o.c. @ Sides
Y Direction - 22 - #5 Bars @ 12" o.c.	8 - #4 Ties @ 12" max. o.c.

Serviceability	Quantities
16.35% of footing in uplift	2285 lbs of reinforcement
Safety factor against overturning = 29.94	18.29 cyd of concrete

Uncracked Section Calculations

Wgt of soil above pad (Ps)	37.05 k		
Wgt of concrete (Pc)	74.07 k	Total Area (A)	242.00 ft²
Total Load (Pt)	125.52 k		
X	11.00 ft	Y	5.50 ft
Ix	2440.17 ft⁴	Iy	9760.67 ft⁴
Mx	155.84 k-ft	My	767.41 k-ft

Corner Stresses [Factored[1] (unfactored) loads]

F1	1.73 ksf (1.58 ksf)
F2	1.03 ksf (0.97 ksf)
F3	-0.70 ksf (-0.54 ksf)
F4	0.01 ksf (0.07 ksf)

Cracked Section Calculations [Factored loads[1] (unfactored loads)]

A1	102.12 ft² (136.01 ft²)	L1	9.28 ft (12.36 ft)	W1	11.00 ft (11.00 ft)
A2	31.31 ft² (26.87 ft²)	L2	12.72 ft (9.64 ft)	W2	2.46 ft (2.79 ft)
A3	54.29 ft² (39.56 ft²)	L3	12.72 ft (9.64 ft)	W3	8.54 ft (8.21 ft)
A'	187.71 ft² (202.44 ft²)				
Xc	1.96 ft (1.52 ft)	X1	6.36 ft (4.82 ft)	Y1	0.00 ft (0.00 ft)
Yc	0.77 ft (0.54 ft)	X2	-4.64 ft (-6.18 ft)	Y2	4.27 ft (4.11 ft)
		X3	-2.52 ft (-4.58 ft)	Y3	0.19 ft (-0.03 ft)
Ixc	1120.16 ft⁴ (1521.04 ft⁴)	X'	12.96 ft (12.52 ft)		
Iyc	6680.63 ft⁴ (7097.99 ft⁴)	Y'	6.27 ft (6.04 ft)		
Ixcyc	-1092.13 ft⁴ (-930.66 ft⁴)				
Mxc	59.49 ft-k (67.74 ft-k)				
Myc	521.97 ft-k (476.27 ft-k)				

Corner Stresses [Factored[1] (unfactored) loads]

F1	2.65 ksf (2.00 ksf)
F2	0.96 ksf (0.98 ksf)
F3	-1.31 ksf (-0.76 ksf)
F4	0.38 ksf (0.26 ksf)

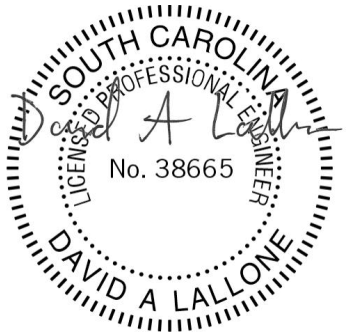

Oct 25 2023

0

BT7 - 8 of 13

Walpar © 2014

Box Truss Double Pole Structure Design

Job No : C3546 Structure No : OH-12 Station : 414+73.64(EB)

Left Upright Spread Footing Design (cont.)

Moment and Shear Calculation Results

LL	7.13 ft	WW	4.38 ft	S_{y0}	1.80 ksf	S_{x0}	1.51 ksf
L_{x1}	8.25 ft	W_{x1}	0.00 ft	S_{y1}	1.52 ksf	S_{x1}	1.51 ksf
L_{x2}	5.04 ft	W_{x2}	3.21 ft	S_{y2}	1.19 ksf	S_{x2}	1.02 ksf
L_{y1}	2.75 ft	W_{y1}	5.50 ft	S_{y3}	1.07 ksf	S_{x3}	0.84 ksf
L_{y2}	3.21 ft	W_{y2}	2.29 ft	Pcs	0.39 ksf		
				DTS_y	13.66 k/ft	DTS_x	3.71 k/ft
				M_{YY}	29.68 ft-k	M_{XX}	8.62 ft-k

Reinforcement Calculations

f_{cr} : 1596 psi v_{cr} : 69 psi n : 9.29

b : 12.00 in d : 14.00 in x : 5.25 in

About Y Axis		About X Axis	
p :	0.0054	p :	0.0018
k :	0.2710	k :	0.1669
j :	0.9097	j :	0.9444
f_{ca} :	1229 psi	f_{ca} :	558 psi
v_{ca} :	89 psi	v_{ca} :	23 psi
Mt :	650411 in-k	Mt :	188794 in-k
ld_r :	23.80 in	ld_r :	25.43 in
ld_a :	82.50 in	ld_a :	49.50 in
ld_{min} :	61.62 in	ld_{min} :	34.23 in
A_{sr} :	0.88 in²	A_{sr} :	0.24 in²
A_s Used :	1.00 in²	A_s Used :	0.31 in²

Tie Size : #4

Pedestal Calculations

V_1 : 21343 lbs V_2 : 0 lbs V_t : 21343 lbs

About Y Axis		About X Axis	
C_x :	46.50 in	C_y :	13.50 in
G_x :	85.00 in	G_y :	19.00 in
f_a :	5.73 psi	f_v :	844.25 psi
F_a :	1596 psi	F_v :	26334 psi
f_{bx} :	30.36 psi	f_{by} :	569.79 psi
F_{bx} :	1596 psi	F_{by} :	1596 psi
M_x :	129231 ft-lb	M_y :	635917 ft-lb
M_{ox} :	359339 ft-lb	M_{oy} :	1607571 ft-lb
I_x :	2375334 in⁴	I_y :	180800 in⁴
A_g :	2511 in²	A_{sm} :	25.11 in²
A_{st} :	25.28 in²	A_s :	7.11 in²
QTY :	32	A_b :	0.79 in²
X Sp'g :	6.54 in	Y Sp'g :	6.33 in
C_{sx} :	25.34 in	C_{sy} :	8.60 in
N qty :	12	R qty :	4
CSR :	0.38	CSM :	0.76

Sliding friction μ : 0.40

Factor of safety against sliding : 1.92

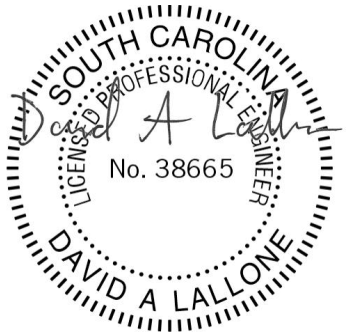

Oct 25 2023

0

BT7 - 9 of 13

Walpar © 2014

Box Truss Double Pole Structure Design

Job No : C3546 Structure No : OH-12 Station : 414+73.64(EB)

Right Upright Spread Footing Design

Material/Soil Specifications and Safety Factors

Concrete f'_c :	3000 psi	Concrete wgt :	150 pcf
Rebar yield f_y :	60000 psi	Rebar F_s :	24000 psi
Soil Bearing Capacity :	2000 psf	Soil unit wgt :	110 pcf

Load Safety Factor[1] : 1.15

Loads and Locations From Structure

Truss DL React (Rd)	10.64 k	Base to Truss Load Dim (H1)	33.06 ft
Upright DL React (Rv)	3.14 k	Base to Upright Load Dim (H2)	17.47 ft
Truss WL React (Rh)	16.36 k	Total DL React (DL)	13.78 k
Upright WL React (Wv)	1.36 k	Transverse Wind Component (tc)	3.54 k

Loads at Top of Pedestal from Structure

Axial load (P)	13.78 k		
Moment (ML)	564.74 ft-k	Moment (Mw)	117.20 ft-k
Shear (VL)	17.72 k	Shear (Vw)	3.54 k

Final Spread Footing Design Sizes

Pad Length (L)	21.00 ft	Pedestal Width (PW)	2.50 ft
Pad Width (W)	11.00 ft	Pedestal Length (PL)	8.00 ft
Pad Thickness (T)	1.50 ft	Pedestal Projection at Ctr (PE)	1.00 ft
		Ground line to top of pad (PT)	3.00 ft

Reinforcement

Pad	Pedestal
Top each way - #4 Bars @ 12" o.c.	5 ea. - #8 Vert. Bars @ 5.50" o.c. @ Ends
X Direction - 11 - #8 Bars @ 12.00" o.c.	15 ea. - #8 Vert. Bars @ 5.50" o.c. @ Sides
Y Direction - 21 - #4 Bars @ 12" o.c.	5 - #4 Ties @ 12" max. o.c.

Serviceability	Quantities
11.60% of footing in uplift	1773 lbs of reinforcement
Safety factor against overturning = 12.08	15.80 cyd of concrete

Uncracked Section Calculations

Wgt of soil above pad (Ps)	63.98 k		
Wgt of concrete (Pc)	69.63 k	Total Area (A)	231.00 ft²
Total Load (Pt)	147.39 k		
X	10.50 ft	Y	5.50 ft
Ix	2329.25 ft⁴	Iy	8489.25 ft⁴
Mx	157.21 k-ft	My	761.55 k-ft

Corner Stresses [Factored[1] (unfactored) loads]

F1	1.95 ksf (1.78 ksf)
F2	1.21 ksf (1.13 ksf)
F3	-0.68 ksf (-0.50 ksf)
F4	0.07 ksf (0.14 ksf)

Cracked Section Calculations [Factored loads[1] (unfactored loads)]

A1	130.95 ft² (153.75 ft²)	L1	11.90 ft (13.98 ft)	W1	11.00 ft (11.00 ft)
A2	23.46 ft² (23.65 ft²)	L2	9.10 ft (7.02 ft)	W2	2.58 ft (3.37 ft)
A3	38.29 ft² (26.80 ft²)	L3	9.10 ft (7.02 ft)	W3	8.42 ft (7.63 ft)
A'	192.71 ft² (204.20 ft²)				
Xc	1.48 ft (1.07 ft)	X1	4.55 ft (3.51 ft)	Y1	0.00 ft (0.00 ft)
Yc	0.54 ft (0.39 ft)	X2	-5.95 ft (-6.99 ft)	Y2	4.21 ft (3.82 ft)
		X3	-4.44 ft (-5.82 ft)	Y3	0.11 ft (-0.41 ft)
Ixc	1476.24 ft⁴ (1774.20 ft⁴)	X'	11.98 ft (11.57 ft)		
Iyc	6122.27 ft⁴ (6601.03 ft⁴)	Y'	6.04 ft (5.89 ft)		
Ixcyc	-841.79 ft⁴ (-691.29 ft⁴)				
Mxc	78.33 ft-k (79.52 ft-k)				
Myc	542.83 ft-k (504.40 ft-k)				

Corner Stresses [Factored[1] (unfactored) loads]

F1	2.48 ksf (2.04 ksf)
F2	1.24 ksf (1.18 ksf)
F3	-0.95 ksf (-0.59 ksf)
F4	0.29 ksf (0.26 ksf)

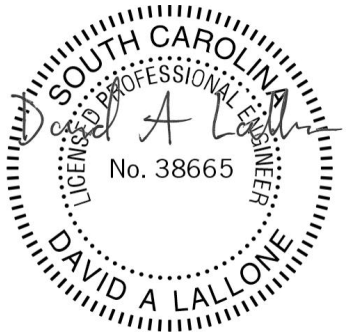

Oct 25 2023

0

BT7 - 10 of 13

Walpar © 2014

Box Truss Double Pole Structure Design

Job No : C3546 Structure No : OH-12 Station : 414+73.64(EB)

Right Upright Spread Footing Design (cont.)

Moment and Shear Calculation Results

LL	6.50 ft	WW	4.25 ft	S_{y0}	1.86 ksf	S_{x0}	1.38 ksf
L_{x1}	8.25 ft	W_{x1}	0.00 ft	S_{y1}	1.62 ksf	S_{x1}	1.38 ksf
L_{x2}	5.17 ft	W_{x2}	3.08 ft	S_{y2}	1.30 ksf	S_{x2}	1.04 ksf
L_{y1}	2.25 ft	W_{y1}	5.50 ft	S_{y3}	1.18 ksf	S_{x3}	0.91 ksf
L_{y2}	3.08 ft	W_{y2}	2.42 ft	Pcs	0.56 ksf		
			0.00 ft	DTS_y	10.66 k/ft	DTS_x	2.62 k/ft
			0.00 ft	M_{YY}	22.76 ft-k	M_{XX}	6.04 ft-k

Reinforcement Calculations

f_{cr} : 1596 psi v_{cr} : 69 psi n : 9.29

b : 12.00 in d : 14.00 in x : 5.25 in

About Y Axis		About X Axis	
p :	0.0042	p :	0.0018
k :	0.2420	k :	0.1669
j :	0.9193	j :	0.9444
f_{ca} :	1044 psi	f_{ca} :	391 psi
v_{ca} :	69 psi	v_{ca} :	17 psi
Mt :	498774 in-k	Mt :	132376 in-k
ld_r :	23.39 in	ld_r :	25.25 in
ld_a :	75.00 in	ld_a :	48.00 in
ld_{min} :	54.77 in	ld_{min} :	27.39 in
A_{sr} :	0.66 in²	A_{sr} :	0.17 in²
A_s Used :	0.79 in²	A_s Used :	0.20 in²

Tie Size : #4

Pedestal Calculations

V_1 : 18076 lbs V_2 : 0 lbs V_t : 18076 lbs

About Y Axis		About X Axis	
C_x :	48.00 in	C_y :	15.00 in
G_x :	88.00 in	G_y :	22.00 in
f_a :	4.79 psi	f_v :	572.01 psi
F_a :	1596 psi	F_v :	26334 psi
f_{bx} :	25.48 psi	f_{by} :	434.45 psi
F_{bx} :	1596 psi	F_{by} :	1596 psi
M_x :	131383 ft-lb	M_y :	635635 ft-lb
M_{ox} :	508539 ft-lb	M_{oy} :	2034155 ft-lb
I_x :	2969534 in⁴	I_y :	263356 in⁴
A_g :	2880 in²	A_{sm} :	28.80 in²
A_{st} :	31.60 in²	A_s :	8.69 in²
QTY :	40	A_b :	0.79 in²
X Sp'g :	5.50 in	Y Sp'g :	5.50 in
C_{sx} :	26.40 in	C_{sy} :	9.78 in
N qty :	15	R qty :	5
CSR :	0.29	CSM :	0.57

Sliding friction μ : 0.40

Factor of safety against sliding : 2.66

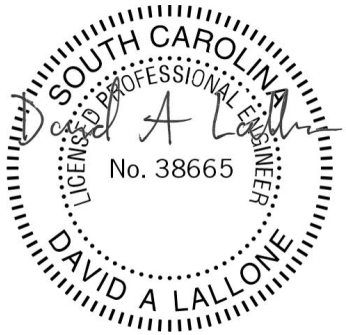

Oct 25 2023

0

BT7 - 11 of 13

Walpar © 2014

Box Truss Double Pole Structure Design

Job No : C3546 Structure No : OH-12 Station : 414+73.64(EB)

Left Upright Cylindrical Footing Design

Concrete f'_c :	3000 psi	Concrete wgt :	150 pcf
Rebar yield f_y :	60000 psi	Min factor of safety for uplift :	1.00
Reinforcement Clear. :	4 in	Min factor of safety for lateral load :	2.86

Loads and Locations From Structure

Truss DL React (Rd)	12.19 k	Base to Truss Load Dim (H1)	23.38 ft
Upright DL React (Rv)	2.20 k	Base to Upright Load Dim (H2)	12.63 ft
Truss WL React (Rh)	19.98 k	Footing Projection at Ctr (H3)	6.00 ft
Upright WL React (Wv)	0.95 k	C/C of Cylinders (C)	5.50 ft

Normal Overturning Moment (M_{WL})	604.52 ft-k	Effective Hgt (H_{eff})	28.89 ft
Transverse Moment (M_{TL})	120.90 ft-k	Lateral Load (P_{eff})	9.83 k
Resultant Moment (M_R)	616.50 ft-k	Axial Force	10.80 k
Effective Overturning Moment	378.47 ft-k		

Final Cylindrical Footing Design Sizes

Req'd area of steel (A_s)	17.52 in²	Rebar Cage Dia (D1)	31.75 in
1% Cyl Area Min (A_m)	13.85 in²	Vertical bar spacing	7.12 in
Actual Reinf Area (A_p)	17.78 in²		

USE 42 in DIA x 25'- 0 CYLINDER
w/ 14- # 10 VERT. BARS & 26 - #4 HOOPS

Serviceability	Quantities
Calculated lateral safety factor = 6.8	3287 lbs of reinforcement
Calculated uplift safety factor = 3.6	17.82 cyd of concrete

Side Shear Results
(from Beta Method)

Cylinder Embedment	19.00 ft
Axial load	7.20 k
Uplift load	68.81 k
Weight of shaft	36.08 k
Side Resistance Capacity	246.20 k

Lateral Load Calculation Results
(from Brom's Method)

Soil friction angle Φ	32.7°
Soil unit weight γ	119 pcf
Average $(N_1)_{60}$ over eff depth (BPF)	26
Effective lateral load on cylinder	9.83 k
Effective moment on cylinder	283.85 ft-k
Axial thrust from moment and vertical loads	79.61 k
Rankine Passive Pressure Coeff. K_P	2.96
Ultimate soil resistance P_{ult}	169.58 k
Allowable soil resistance P_{max}	78.86 k
Ultimate soil moment capacity M_{ult}	3037 ft-k
Allowable soil moment capacity M_{max}	1412 ft-k
Ground line moment	343 ft-k
Dist. from GL to 0 shear point in cyl.	4.30 ft
Maximum moment in shaft	444 ft-k

SOUTH CAROLINA
LICENSED PROFESSIONAL ENGINEER
David A Lallone
No. 38665
DAVID A LALLONE

Oct 25 2023

0

BT7 - 12 of 13

Walpar © 2014

Box Truss Double Pole Structure Design

Job No : C3546 Structure No : OH-12 Station : 414+73.64(EB)

Right Upright Cylindrical Footing Design

Concrete f'_c :	3000 psi	Concrete wgt :	150 pcf
Rebar yield f_y :	60000 psi	Min factor of safety for uplift :	1.00
Reinforcement Clear. :	4 in	Min factor of safety for lateral load :	2.86

Loads and Locations From Structure

Truss DL React (Rd)	10.64 k	Base to Truss Load Dim (H1)	33.06 ft
Upright DL React (Rv)	3.14 k	Base to Upright Load Dim (H2)	17.47 ft
Truss WL React (Rh)	16.36 k	Footing Projection at Ctr (H3)	1.00 ft
Upright WL React (Wv)	1.36 k	C/C of Cylinders (C)	5.50 ft

Normal Overturning Moment (M_{WL})	582.46 ft-k	Effective Hgt (H_{eff})	32.86 ft
Transverse Moment (M_{TL})	116.49 ft-k	Lateral Load (P_{eff})	8.53 k
Resultant Moment (M_R)	594.00 ft-k	Axial Force	10.34 k
Effective Overturning Moment	373.53 ft-k		

Final Cylindrical Footing Design Sizes

Req'd area of steel (A_s)	13.16 in²	Rebar Cage Dia (D1)	31.88 in
1% Cyl Area Min (A_m)	13.85 in²	Vertical bar spacing	7.15 in
Actual Reinf Area (A_p)	14.00 in²		

USE 42 in DIA x 23'- 0 CYLINDER
w/ 14- # 9 VERT. BARS & 24 - #4 HOOPS

Serviceability	Quantities
Calculated lateral safety factor = 11.7	2451 lbs of reinforcement
Calculated uplift safety factor = 1.7	16.39 cyd of concrete

Side Shear Results
(from Beta Method)

Cylinder Embedment	22.00 ft
Axial load	6.89 k
Uplift load	67.92 k
Weight of shaft	33.19 k
Side Resistance Capacity	114.43 k

Lateral Load Calculation Results
(from Brom's Method)

Soil friction angle Φ	31.0°
Soil unit weight γ	104 pcf
Average $(N_1)_{60}$ over eff. depth (BPF)	11
Effective lateral load on cylinder	8.53 k
Effective moment on cylinder	280.15 ft-k
Axial thrust from moment and vertical loads	78.25 k
Rankine Passive Pressure Coeff. K_P	2.69
Ultimate soil resistance P_{ult}	226.33 k
Allowable soil resistance P_{max}	105.25 k
Ultimate soil moment capacity M_{ult}	3911 ft-k
Allowable soil moment capacity M_{max}	1819 ft-k
Ground line moment	289 ft-k
Dist. from GL to 0 shear point in cyl.	4.41 ft
Maximum moment in shaft	335 ft-k

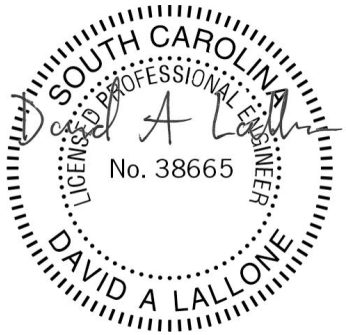

Oct 25 2023

0

BT7 - 13 of 13

Walpar © 2014

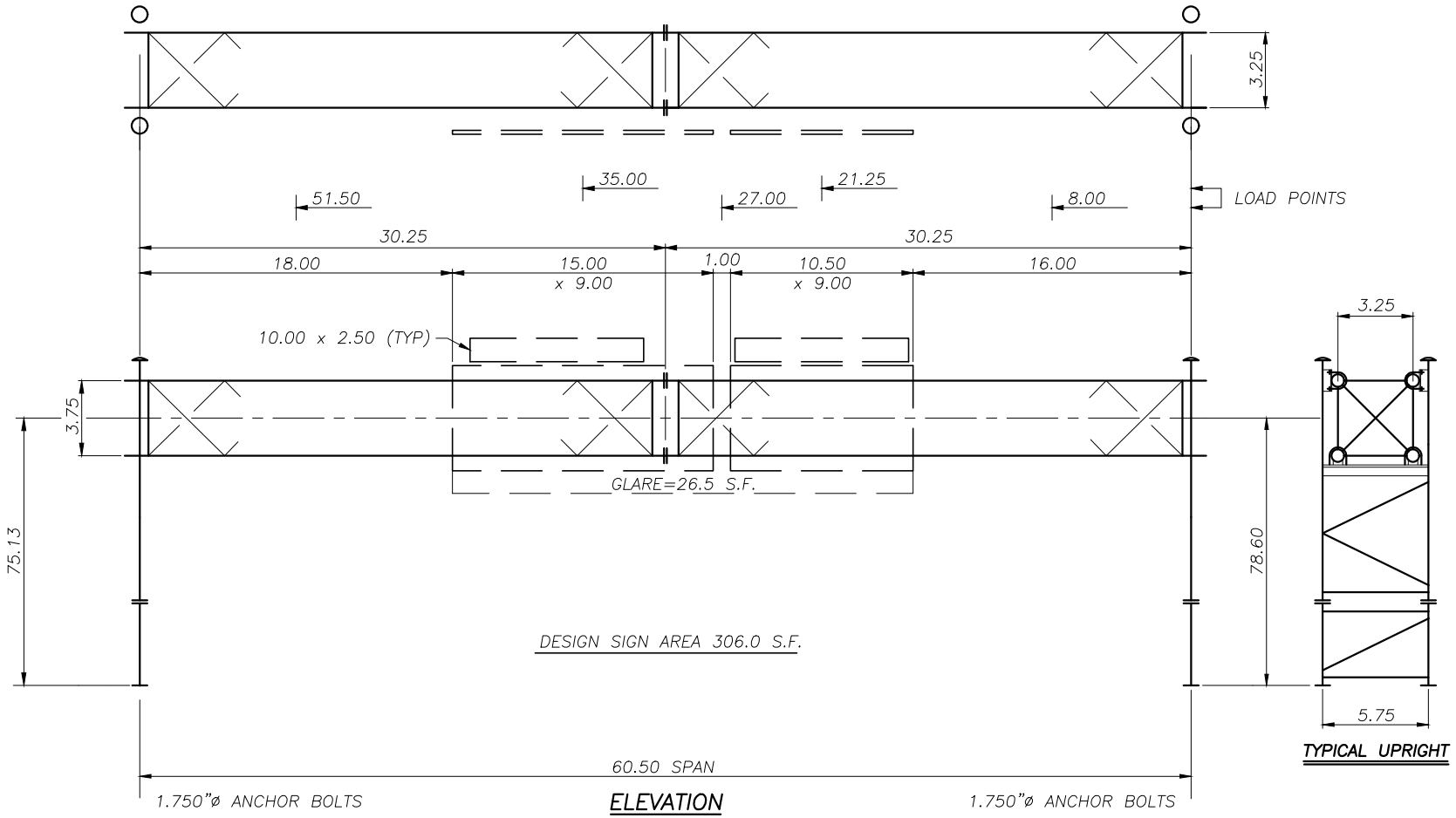

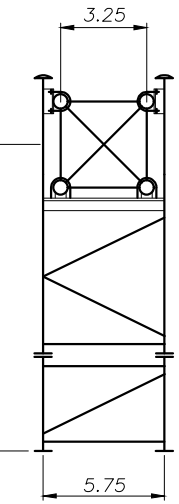

TYPICAL UPRIGHT

ELEVATION

STR NO: OH-20
STA NO: 5418+54.43(EB)

TRUSS:	CHORDS	4.500 x 0.188
	VERT DIAGONALS	1.660 x 0.140
	HORIZ DIAGONALS	1.660 x 0.140
	STRUTS	1.315 x 0.133
	INT DIAGONALS	1.315 x 0.133

UPRIGHTS:	LEFT POSTS	18.000 x 0.250
	STRUTS & DIAGONALS	4.500 x 0.188
	RIGHT POSTS	20.000 x 0.250
	STRUTS & DIAGONALS	5.563 x 0.188

SOUTH CAROLINA
LICENSED PROFESSIONAL ENGINEER
No. 38665
DAVID A LALLONE

Oct 25 2023

Subject Box Truss Design Information Sheet BT8
Job No C3546 By IWL Date 8/24/23
GROUP 2 Chk'd By RRW Date 9/13/23

Box Truss Double Pole Structure Design

Reference Walpar Job Number C3546
Reference Design Information Sheet Number BT8 Structure : OH-20 Station : 5418+54.43(EB)
State SC
AASHTO Specification 6th Edition Fatigue Category : II
Design Wind Velocity (V) 100 mph

Structure Dimensions

Span (S)	60.50 ft	Truss Hgt (U)	3.75 ft	Truss Depth (Y)	3.25 ft
Truss Section Length	31.25 ft			Coeff of Hgt (Kz)	1.21
Left Upright Hgt (H)	75.13 ft	Right Upright Hgt (H)	78.60 ft	Center to center of upright posts (Yu)	5.75 ft
Left Upright Splice Dist.	36.5208 ft	Right Upright Splice Dist.	41.1042 ft		

Sign Information **Design Sign Area: 306.00 sq ft** Z Ecc to bottom of Glare Screen

Sign	Load (i)	Lgth (B_i)	Hgt (D_i)	Location (a_i)	Unit Wgt	Depth	C_d	Front/Back	Z Ecc	Area	Exit Panel
1	2	10.50	9.00	21.25	7.00		1.13	F	5.50	130.5	X
2	4	15.00	9.00	35.00	7.00		1.14	F	5.50	175.5	X

Walkway Information

	Lgth	Location	Width	Unit wgt	Y Ecc
WW1	31.50	26.75	2.54	60	5.52

Load Summary Estimate for Field Use Only
(Distance from right end of assembled truss)

Weight of truss only	3148 lbs
Weight of erected signs & WW	3144 lbs
Center of erected sign & WW+truss load	30.69 ft
Front to Back Overturning on Truss	13024 ft-lbs
Max upright weight	10991 lbs
Max truss section weight	1589 lbs



Oct 25 2023

0

BT8 - 1 of 13

Walpar © 2014

Box Truss Double Pole Structure Design

Job No : C3546 Structure No : OH-20 Station : 5418+54.43(EB)

Loads

Unit wind load on sign(s)/C_d: 35.31 psf Unit wind load on exposed truss: 42.38 psf Unit wgt of truss: 49.82 plf Unit ice wgt on truss: 22.90 plf

Truss Area for Wind Load (A_t): 1.19 sq ft / ft ***All loads in charts in lbs, ft or ft-lbs unless noted**

Truss Load Summary For Actual Sign & WW Condition

	Load (i)	Dead	Wind (W_p & W_h)	Ice
Sign and Truss Loads Ref: (BT8)	1	797	806	366
	2	1437	5192	632
	3	50	50	23
	4	1976	7073	870
	5	897	907	412
WW Loads	WW1	1890	814	841
Left Reaction (R_L)		3374	7176	1507
Right Reaction (R_R)		3672	7666	1638
Maximum Moments (M)		68674	160531	30479
Point of "0" shear (A_m)		29.58	29.89	29.58

** WW/EQ Loads are incorporated into Sign and Truss Loads to determine Reactions and Moments

Serviceability Requirements

Truss DL + IL Deflection	0.44 in
Limit for Deflection	4.84 in
Camber Used (Cu)	1.56 in
Permanent Camber (Cp)	1.25 in

SOUTH CAROLINA LICENSED PROFESSIONAL ENGINEER No. 38665 DAVID A LALLONE

Oct 25 2023

Post Loads

	Dead	Wind	Ice	Group II t_c	Group III t_c	Lateral Stiffness Ratio
Left Upright	9504	4958	2651	1608	2413	0.45
Right Upright	10991	5731	3124	1198	1797	0.55

0

Walpar © 2014

Box Truss Double Pole Structure Design

Job No : C3546 Structure No : OH-20 Station : 5418+54.43(EB)

Load Combinations for Design Sign Area

Truss Member Loads	DL	DL +WL	DL+1/2 WL+IL
Truss Chords (Pc)	12398	37095	30243
Vertical Diagonals (Pv)	4348	5010	6519
Horizontal Diagonals (Ph)	1675	8035	5510
Vertical Struts (Psv)	3126	2312	3067
Horizontal Struts (Psh)	1118	5364	3678
Truss Moments			
Truss Chords (XMc)	706	4266	2523

Upright Member Loads	Upright Loads					Web Member Loads	
Left Upright	M_N	M_{tc}	V_N	V_{tc}	Axial	Diagonals	Struts
Group II Comb. 1 (DL+WL)	732489	174234	12134	3093	12878	18215	12880
Group III Comb. 1 (DL+1/2WL+IL)	366244	87117	6067	1546	17036	9108	6440
Group II Comb. 2 (DL+WL)	439493	261351	7281	4639	12878	11800	8344
Group III Comb. 2 (DL+1/2WL+IL)	219747	130675	3640	2320	17036	5900	4172
Right Upright							
Group II Comb. 1 (DL+WL)	1069534	165465	13397	2682	14663	20327	14373
Group III Comb. 1 (DL+1/2WL+IL)	534767	82732	6698	1341	19424	10163	7187
Group II Comb. 2 (DL+WL)	641721	248197	8038	4023	14663	12851	9087
Group III Comb. 2 (DL+1/2WL+IL)	320860	124099	4019	2012	19424	6425	4544

Material Information

	Pipe Size (Min Yield)	Unbraced Length	CSR Group II	CSR Group III
Truss Chords	4.500 x 0.188 (52 ksi)	7.25 ft	0.88	0.62
Vertical Diagonals	1.660 x 0.140 (52 ksi)	5.22 ft	0.51	0.66
Vertical Struts	1.315 x 0.133 (52 ksi)	3.75 ft	0.27	0.36
Horizontal Diagonals	1.660 x 0.140 (52 ksi)	4.87 ft	0.71	0.49
Horizontal Struts	1.315 x 0.133 (52 ksi)	3.25 ft	0.49	0.34

	Pipe Size (Min Yield)	Unbraced Length	CSR (Comb. 1) Group II	CSR (Comb. 1) Group III	CSR (Comb. 2) Group II	CSR (Comb. 2) Group III
Left Upright Posts	18.000 x 0.250 (52 ksi)	73.06 ft	0.62	0.32	0.72	0.37
Left Upright Diagonals	4.500 x 0.188 (52 ksi)	6.04 ft	0.21	0.11	0.14	0.07
Left Upright Strut	4.500 x 0.188 (52 ksi)	4.25 ft	0.14	0.07	0.09	0.04
Right Upright Posts	20.000 x 0.250 (52 ksi)	76.54 ft	0.55	0.29	0.61	0.31
Right Upright Diagonals	5.563 x 0.188 (52 ksi)	5.70 ft	0.18	0.09	0.11	0.06
Right Upright Strut	5.563 x 0.188 (52 ksi)	4.08 ft	0.12	0.06	0.08	0.04



Oct 25 2023

0

BT8 - 3 of 13

Walpar © 2014

Box Truss Double Pole Structure Design

Job No : C3546 Structure No : OH-20 Station : 5418+54.43(EB)

Structure Detail Information

Truss Chord Splices

Maximum Design Load at Splice	65503 lbs
Splice Moment (per inch of circum)	2896 in-lbs
Splice Bolt Circle	7.5 in.
Splice Bolt Qty & Size	4 - ¾" ø A325
Splice Plate Thickness	0.75 in.
Splice Plate Weld	¼ fillet

Upright Detail

	Left	Right
Maximuim Anchor Bolt Pullout	64634 lbs	63502 lbs.
Anchor Bolt Spacing	18 in.	20 in.
Anchor Bolt Yield	55 ksi	55 ksi
Anchor Bolt Qty & Size (ea pole)	4 - 1.75" ø	4 - 1.75" ø
Anchor Bolt Length (Embed)	4.50 ft (3.5 ft)	4.50 ft (3.5 ft)
Anchor Bolt CSR	0.87	0.84
Base Plate Thickness	2 in.	2 in.
Base Plate Weld	5/16 fillet	5/16 fillet
Truss Seat	W8x24	W8x24
Truss Connection U-Bolts	½" ø	½" ø
Splice Moment (per inch of circum)	4803 in. lbs	4809 in. lbs
Splice Bolt Circle	21 in.	23 in.
Splice Bolt Qty & Size	16 - 1" ø A325	16 - 1" ø A325
Splice Plate Thickness	1.25 in.	1.25 in.
Splice Plate Weld	5/16 fillet	5/16 fillet

Sign Hanger Detail

Design hanger spacing 9.00 ft

Sign Hanger U-Bolt type ASTM-A307

SIGN	Max UBL at End	Max Spacing	Hanger U-Bolt	Sign Hanger	Hanger Support
1	3.15 ft	9.00 ft	2 - ½" ø	L5x3x5/16	W6x9
2	3.15 ft	9.00 ft	2 - ½" ø	L5x3x5/16	W6x9

Structure Input (For Foundation Designs)

	Left	Right
Truss DL React (Rd)	4.45 k	4.96 k
Upr DL React (Rv)	9.50 k	10.99 k
Truss WL React (Rh)	7.20 k	7.71 k
Upr WL React (Wv)	4.96 k	5.73 k
Distance To Rh (H1)	75.13 ft	78.60 ft
Distance To Wv (H2)	38.50 ft	40.24 ft
Min Ped Lgth (PL)	8.50 ft	8.75 ft
Min Ped Wth (PW)	2.75 ft	3.00 ft



Oct 25 2023

0

BT8 - 4 of 13

Walpar © 2014

Box Truss Double Pole Structure Design

Job No : C3546 Structure No : OH-20 Station : 5418+54.43(EB)

Vibration and Fatigue (Per AASHTO 6th Edition)

Natural Wind Gust Load on Sign(s)/C_d	4.42 psf	Truck Induced Gust Load on Truss	17.02 psf
Natural Wind Gust Load on Truss	5.30 psf	Extent of Truck Induced Gust	12.00 ft
		Truss Area for Truck Induced Gust	1.16 sq ft / ft
		Location of Center of Truck Induced Gust	30.25 ft

Truck Induced Gust Loading

ID	P_{TG} (Uplift)	P_{TG} Torque	Location
Truss Chords	236		30.25
SIGN 1 (PARTIAL)			25.38
Walkway	1265	1862	30.25
Left Reaction	751		
Right Reaction	751		
Maximum Moments	20458		

Truss Load Summary for Natural Wind

LOADS (i)	$P_{NWG(i)}$
1	101
2	595
3	6
4	807
5	113
Left Reaction	834 lbs
Right Reaction	891 lbs
Maximum Moments	18534 ft-lbs

Load Combinations for Vibration and Fatigue

Truss Members	P_{NWG}	P_{TG}
Truss Chords	2851	2728
Vertical Diagonals		522
Horizontal Diagonals	334	
Vertical Struts		375
Horizontal Struts	223	
Upright Members		
Left Post	10894	375
Right Post	12181	375

Vibration and Fatigue Stresses

	NWG (ksi)	TIG (ksi)	Allowable (ksi)	
Truss Vertical Diagonals		0.78	1.20	
Truss Horizontal Diagonals	0.50		1.20	
Truss Vertical Struts		0.76	1.20	
Truss Horizontal Struts	0.45		1.20	
Truss chord at web members	0.34	1.07	4.50	
Upright Base Connection LT	0.78	0.03	2.60	Socket Connection Base Detail
Upright Base Connection RT	0.79	0.02	2.60	Socket Connection Base Detail
Anchor bolts - LT	1.43		7.00	
Anchor bolts - RT	1.60		7.00	



Oct 25 2023

0

BT8 - 5 of 13

Walpar © 2014

Box Truss Double Pole Structure Design

Job No : C3546 Structure No : OH-20 Station : 5418+54.43(EB)

Left Foundation Design

Boring Type SPT Boring Designation IB31-1
Major Soil Type Cohesionless Depth to Water 16.6 ft Surcharge (Frost) Depth 2 ft
Ground Slope 10:1 Consider slope stability? N

SOIL TYPES	
01-GP	07-SM
02-GW	08-ML
03-GM	09-MH
04-GC	10-SC
05-SP	11-CL
06-SW	12-CH

Soil Properties

Depth	N Value	γ' (pcf)	Φ (deg)	S_u (lbf/ft^2)	α	β	f_{SN} (lbf/ft^2)	$(N_1)_{60}$	Soil Type
**0 - 2	9	110	34	1125			259	18	10
2 - 6	13	107	34			1.07	618	26	07
6 - 11	30	121	40			1.11	7417	43	01
11 - 16.6	35	150	40	4000	0.55		1429	35	13
16.6 - 21	35	90	40	4000	0.55		7417	35	13
21 - 36	40	90	40	4000			7417	40	13
36 - 46	45	90	40	4000				45	13

* Soil Type 13 indicates rock layer with N>60 for cohesionless soil or N>40 for cohesive soils
**Top 2.0 ft of soil will not contribute to load resistance.

Soil Bearing Capacity for Left Spread Footing Design

Footing width, B 12.00 ft
Footing length, L 23.00 ft
Eccentricity, e_L 4.06 ft
Eccentricity, e_B 1.01 ft
Effective ftg width, B' 9.97 ft
Effective ftg width, L' 14.88 ft

Total wgt of load, foundation and soil, Pt 180.39 k
Normal moment, ML 732.04 ft-k
Transverse moment, Mw 182.72 ft-k
Distance from ground to bottom of footing, d_{min} 4.15 ft
Distance from ground to bottom of footing, D_f 4.75 ft
Distance to ground water from bottom of ftg, z_w 12.45 ft
Overburden pressure at base of footing, q 0.52 ksf
Weighted average soil unit weight below pad, γ 133 pcf

Ultimate bearing capacity, q_{ult} 60.00 ksf
Allowable Bearing Capacity 20.75 ksf
Bearing Capacity used *** 2.00 ksf

***Note: Bearing capacities greater than 4.0 ksf will rarely effect spread footing pad size



Oct 25 2023

0

BT8 - 6 of 13

Walpar © 2014

Box Truss Double Pole Structure Design

Job No : C3546 Structure No : OH-20 Station : 5418+54.43(EB)

Right Foundation Design

Boring Type SPT Boring Designation IB31-3
Major Soil Type Cohesionless Depth to Water 10 ft Surcharge (Frost) Depth 2 ft
Ground Slope 10:1 Consider slope stability? N

SOIL TYPES	
01-GP	07-SM
02-GW	08-ML
03-GM	09-MH
04-GC	10-SC
05-SP	11-CL
06-SW	12-CH

Soil Properties

Depth	N Value	γ' (pcf)	Φ (deg)	S_u (lbf/ft^2)	α	β	f_{SN} (lbf/ft^2)	$(N_1)_{60}$	Soil Type
**0 - 2	15	108	35			1.20	173	30	07
2 - 7.2	30	115	37			1.20	523	60	07
7.2 - 10	30	150	40	3750	0.55		1100	30	13
10 - 15.6	30	61	40			1.02	7417	35	01
15.6 - 30.6	40	90	40	4000	0.55		7417	40	13
30.6 - 45.6	45	90	40	4000			7417	45	13
							7417		

* Soil Type 13 indicates rock layer with N>60 for cohesionless soil or N>40 for cohesive soils
**Top 2.0 ft of soil will not contribute to load resistance.

Soil Bearing Capacity for Right Spread Footing Design

Footing width, B 12.00 ft
Footing length, L 24.00 ft
Eccentricity, e_L 4.40 ft
Eccentricity, e_B 1.11 ft
Effective ftg width, B' 9.78 ft
Effective ftg width, L' 15.20 ft

Total wgt of load, foundation and soil, Pt 190.08 k
Normal moment, ML 836.28 ft-k
Transverse moment, Mw 211.23 ft-k
Distance from ground to bottom of footing, d_{min} 4.15 ft
Distance from ground to bottom of footing, D_f 4.75 ft
Distance to ground water from bottom of ftg, z_w 5.25 ft
Overburden pressure at base of footing, q 0.46 ksf
Weighted average soil unit weight below pad, γ 96 pcf

Ultimate bearing capacity, q_{ult} 60.00 ksf
Allowable Bearing Capacity 20.00 ksf
Bearing Capacity used *** 2.00 ksf

***Note: Bearing capacities greater than 4.0 ksf will rarely effect spread footing pad size



Oct 25 2023

0

BT8 - 7 of 13

Walpar © 2014

Box Truss Double Pole Structure Design

Job No : C3546 Structure No : OH-20 Station : 5418+54.43(EB)

Left Upright Spread Footing Design

Material/Soil Specifications and Safety Factors

Concrete f'_c :	3000 psi	Concrete wgt :	150 pcf
Rebar yield f_y :	60000 psi	Rebar F_s :	24000 psi
Soil Bearing Capacity :	2000 psf	Soil unit wgt :	110 pcf

Load Safety Factor[1] : 1.15

Loads and Locations From Structure

Truss DL React (Rd)	4.45 k	Base to Truss Load Dim (H1)	75.13 ft
Upright DL React (Rv)	9.50 k	Base to Upright Load Dim (H2)	38.50 ft
Truss WL React (Rh)	7.20 k	Total DL React (DL)	13.95 k
Upright WL React (Wv)	4.96 k	Transverse Wind Component (tc)	2.43 k

Loads at Top of Pedestal from Structure

Axial load (P)	13.95 k		
Moment (ML)	732.04 ft-k	Moment (Mw)	182.72 ft-k
Shear (VL)	12.16 k	Shear (Vw)	2.43 k

Final Spread Footing Design Sizes

Pad Length (L)	23.00 ft	Pedestal Width (PW)	2.75 ft
Pad Width (W)	12.00 ft	Pedestal Length (PL)	8.50 ft
Pad Thickness (T)	1.50 ft	Pedestal Projection at Ctr (PE)	0.75 ft
		Ground line to top of pad (PT)	3.25 ft

Reinforcement

Pad	Pedestal
Top each way - #4 Bars @ 12" o.c.	6 ea. - #8 Vert. Bars @ 5.00" o.c. @ Ends
X Direction - 12 - #8 Bars @ 12.00" o.c.	16 ea. - #8 Vert. Bars @ 5.53" o.c. @ Sides
Y Direction - 23 - #5 Bars @ 12" o.c.	5 - #4 Ties @ 12" max. o.c.

Serviceability	Quantities
9.49% of footing in uplift	2150 lbs of reinforcement
Safety factor against overturning = 30.67	18.80 cyd of concrete

Uncracked Section Calculations

Wgt of soil above pad (Ps)	90.31 k		
Wgt of concrete (Pc)	76.13 k	Total Area (A)	276.00 ft²
Total Load (Pt)	180.39 k		
X	11.50 ft	Y	6.00 ft
Ix	3312.00 ft⁴	Iy	12167.00 ft⁴
Mx	225.52 k-ft	My	918.76 k-ft

Corner Stresses [Factored[1] (unfactored) loads]	
F1	1.93 ksf (1.76 ksf)
F2	1.11 ksf (1.05 ksf)
F3	-0.62 ksf (-0.46 ksf)
F4	0.19 ksf (0.25 ksf)

Cracked Section Calculations [Factored loads[1] (unfactored loads)]

A1	161.95 ft² (188.10 ft²)	L1	13.50 ft (15.68 ft)	W1	12.00 ft (12.00 ft)
A2	35.81 ft² (35.54 ft²)	L2	9.50 ft (7.32 ft)	W2	3.77 ft (4.85 ft)
A3	39.12 ft² (26.18 ft²)	L3	9.50 ft (7.32 ft)	W3	8.23 ft (7.15 ft)
A'	236.88 ft² (249.82 ft²)				
Xc	1.38 ft (0.95 ft)	X1	4.75 ft (3.66 ft)	Y1	0.00 ft (0.00 ft)
Yc	0.54 ft (0.38 ft)	X2	-6.75 ft (-7.84 ft)	Y2	4.12 ft (3.57 ft)
		X3	-5.16 ft (-6.62 ft)	Y3	-0.51 ft (-1.23 ft)
Ixc	2301.50 ft⁴ (2670.02 ft⁴)	X'	12.88 ft (12.45 ft)		
Iyc	9186.44 ft⁴ (9904.87 ft⁴)	Y'	6.54 ft (6.38 ft)		
Ixcyc	-1151.51 ft⁴ (-909.63 ft⁴)				
Mxc	128.52 ft-k (127.72 ft-k)				
Myc	670.55 ft-k (627.68 ft-k)				

Corner Stresses [Factored[1] (unfactored) loads]	
F1	2.33 ksf (1.96 ksf)
F2	1.15 ksf (1.10 ksf)
F3	-0.81 ksf (-0.51 ksf)
F4	0.37 ksf (0.35 ksf)



Oct 25 2023

0

BT8 - 8 of 13

Walpar © 2014

Box Truss Double Pole Structure Design

Job No : C3546 Structure No : OH-20 Station : 5418+54.43(EB)

Left Upright Spread Footing Design (cont.)

Moment and Shear Calculation Results

LL	7.25 ft	WW	4.63 ft	S_{y0}	1.74 ksf	S_{x0}	1.35 ksf
L_{x1}	8.88 ft	W_{x1}	0.00 ft	S_{y1}	1.52 ksf	S_{x1}	1.35 ksf
L_{x2}	5.42 ft	W_{x2}	3.46 ft	S_{y2}	1.22 ksf	S_{x2}	1.01 ksf
L_{y1}	2.63 ft	W_{y1}	6.00 ft	S_{y3}	1.12 ksf	S_{x3}	0.90 ksf
L_{y2}	3.46 ft	W_{y2}	2.54 ft	Pcs	0.58 ksf		
				DTS_y	11.08 k/ft	DTS_x	2.74 k/ft
				M_{YY}	25.08 ft-k	M_{XX}	6.61 ft-k

Reinforcement Calculations

f_{cr} : 1596 psi v_{cr} : 69 psi n : 9.29

b : 12.00 in d : 14.00 in x : 5.25 in

About Y Axis		About X Axis	
p :	0.0046	p :	0.0018
k :	0.2523	k :	0.1669
j :	0.9159	j :	0.9444
f_{ca} :	1108 psi	f_{ca} :	428 psi
v_{ca} :	72 psi	v_{ca} :	17 psi
Mt :	549529 in-k	Mt :	144918 in-k
ld_r :	24.80 in	ld_r :	26.47 in
ld_a :	84.00 in	ld_a :	52.50 in
ld_{min} :	54.77 in	ld_{min} :	34.23 in
A_{sr} :	0.74 in²	A_{sr} :	0.19 in²
A_s Used :	0.79 in²	A_s Used :	0.31 in²

Tie Size : #4

Pedestal Calculations

V_1 : 12402 lbs V_2 : 0 lbs V_t : 12402 lbs

About Y Axis		About X Axis	
C_x :	51.00 in	C_y :	16.50 in
G_x :	94.00 in	G_y :	25.00 in
f_a :	4.15 psi	f_v :	356.79 psi
F_a :	1596 psi	F_v :	26334 psi
f_{bx} :	30.44 psi	f_{by} :	414.71 psi
F_{bx} :	1596 psi	F_{by} :	1596 psi
M_x :	192453 ft-lb	M_y :	780684 ft-lb
M_{ox} :	630420 ft-lb	M_{oy} :	2370379 ft-lb
I_x :	3869314 in⁴	I_y :	372731 in⁴
A_g :	3366 in²	A_{sm} :	33.66 in²
A_{st} :	34.76 in²	A_s :	9.48 in²
QTY :	44	A_b :	0.79 in²
X Sp'g :	5.53 in	Y Sp'g :	5.00 in
C_{sx} :	28.90 in	C_{sy} :	11.00 in
N qty :	16	R qty :	6
CSR :	0.28	CSM :	0.63

Sliding friction μ : 0.40

Factor of safety against sliding : 4.75



Oct 25 2023

0

BT8 - 9 of 13

Walpar © 2014

Box Truss Double Pole Structure Design

Job No : C3546 Structure No : OH-20 Station : 5418+54.43(EB)

Right Upright Spread Footing Design

Material/Soil Specifications and Safety Factors

Concrete f'_c :	3000 psi	Concrete wgt :	150 pcf
Rebar yield f_y :	60000 psi	Rebar F_s :	24000 psi
Soil Bearing Capacity :	2000 psf	Soil unit wgt :	110 pcf

Load Safety Factor[1] : 1.15

Loads and Locations From Structure

Truss DL React (Rd)	4.96 k	Base to Truss Load Dim (H1)	78.60 ft
Upright DL React (Rv)	10.99 k	Base to Upright Load Dim (H2)	40.24 ft
Truss WL React (Rh)	7.71 k	Total DL React (DL)	15.95 k
Upright WL React (Wv)	5.73 k	Transverse Wind Component (tc)	2.69 k

Loads at Top of Pedestal from Structure

Axial load (P)	15.95 k		
Moment (ML)	836.28 ft-k	Moment (Mw)	211.23 ft-k
Shear (VL)	13.44 k	Shear (Vw)	2.69 k

Final Spread Footing Design Sizes

Pad Length (L)	24.00 ft	Pedestal Width (PW)	3.00 ft
Pad Width (W)	12.00 ft	Pedestal Length (PL)	8.75 ft
Pad Thickness (T)	1.50 ft	Pedestal Projection at Ctr (PE)	0.75 ft
		Ground line to top of pad (PT)	3.25 ft

Reinforcement

Pad	Pedestal
Top each way - #4 Bars @ 12" o.c.	6 ea. - #8 Vert. Bars @ 5.60" o.c. @ Ends
X Direction - 12 - #9 Bars @ 12.00" o.c.	18 ea. - #8 Vert. Bars @ 5.11" o.c. @ Sides
Y Direction - 24 - #5 Bars @ 12" o.c.	5 - #4 Ties @ 12" max. o.c.

Serviceability	Quantities
11.10% of footing in uplift	2485 lbs of reinforcement
Safety factor against overturning = 28.48	19.89 cyd of concrete

Uncracked Section Calculations

Wgt of soil above pad (Ps)	80.55 k		
Wgt of concrete (Pc)	93.58 k	Total Area (A)	288.00 ft²
Total Load (Pt)	190.08 k		
X	12.00 ft	Y	6.00 ft
Ix	3456.00 ft⁴	Iy	13824.00 ft⁴
Mx	259.91 k-ft	My	1046.71 k-ft

Corner Stresses [Factored[1] (unfactored) loads]	
F1	2.02 ksf (1.84 ksf)
F2	1.12 ksf (1.06 ksf)
F3	-0.70 ksf (-0.52 ksf)
F4	0.20 ksf (0.26 ksf)

Cracked Section Calculations [Factored loads[1] (unfactored loads)]

A1	152.57 ft² (183.81 ft²)	L1	12.71 ft (15.32 ft)	W1	12.00 ft (12.00 ft)
A2	41.75 ft² (40.08 ft²)	L2	11.29 ft (8.68 ft)	W2	3.70 ft (4.62 ft)
A3	46.84 ft² (32.06 ft²)	L3	11.29 ft (8.68 ft)	W3	8.30 ft (7.38 ft)
A'	241.16 ft² (255.94 ft²)				
Xc	1.60 ft (1.14 ft)	X1	5.64 ft (4.34 ft)	Y1	0.00 ft (0.00 ft)
Yc	0.63 ft (0.44 ft)	X2	-6.36 ft (-7.66 ft)	Y2	4.15 ft (3.69 ft)
		X3	-4.48 ft (-6.21 ft)	Y3	-0.47 ft (-1.08 ft)
Ixc	2169.68 ft⁴ (2624.56 ft⁴)	X'	13.60 ft (13.14 ft)		
Iyc	10218.67 ft⁴ (10981.42 ft⁴)	Y'	6.63 ft (6.44 ft)		
Ixcyc	-1367.99 ft⁴ (-1105.22 ft⁴)				
Mxc	140.55 ft-k (141.76 ft-k)				
Myc	742.58 ft-k (693.40 ft-k)				

Corner Stresses [Factored[1] (unfactored) loads]	
F1	2.58 ksf (2.11 ksf)
F2	1.13 ksf (1.10 ksf)
F3	-1.00 ksf (-0.62 ksf)
F4	0.45 ksf (0.39 ksf)



Oct 25 2023

0

BT8 - 10 of 13

Walpar © 2014

Box Truss Double Pole Structure Design

Job No : C3546 Structure No : OH-20 Station : 5418+54.43(EB)

Right Upright Spread Footing Design (cont.)

Moment and Shear Calculation Results

LL	7.63 ft	WW	4.50 ft	S_{y0}	1.85 ksf	S_{x0}	1.51 ksf
L_{x1}	8.88 ft	W_{x1}	0.00 ft	S_{y1}	1.58 ksf	S_{x1}	1.51 ksf
L_{x2}	5.54 ft	W_{x2}	3.33 ft	S_{y2}	1.28 ksf	S_{x2}	1.11 ksf
L_{y1}	3.13 ft	W_{y1}	6.00 ft	S_{y3}	1.18 ksf	S_{x3}	0.97 ksf
L_{y2}	3.33 ft	W_{y2}	2.67 ft	Pcs	0.58 ksf		
			0.00 ft	DTS_y	12.55 k/ft	DTS_x	3.16 k/ft
			0.00 ft	M_{YY}	30.41 ft-k	M_{XX}	7.59 ft-k

Reinforcement Calculations

f_{cr} : 1596 psi v_{cr} : 69 psi n : 9.29

b : 12.00 in d : 14.00 in x : 5.25 in

About Y Axis		About X Axis	
p :	0.0056	p :	0.0018
k :	0.2738	k :	0.1669
j :	0.9087	j :	0.9444
f_{ca} :	1247 psi	f_{ca} :	491 psi
v_{ca} :	82 psi	v_{ca} :	20 psi
Mt :	666260 in-k	Mt :	166227 in-k
ld_r :	26.55 in	ld_r :	26.29 in
ld_a :	88.50 in	ld_a :	51.00 in
ld_{min} :	61.62 in	ld_{min} :	34.23 in
A_{sr} :	0.90 in²	A_{sr} :	0.22 in²
A_s Used :	1.00 in²	A_s Used :	0.31 in²

Tie Size : #4

Pedestal Calculations

V_1 : 13702 lbs V_2 : 0 lbs V_t : 13702 lbs

About Y Axis		About X Axis	
C_x :	52.50 in	C_y :	18.00 in
G_x :	97.00 in	G_y :	28.00 in
f_a :	4.22 psi	f_v :	361.35 psi
F_a :	1596 psi	F_v :	26334 psi
f_{bx} :	30.55 psi	f_{by} :	384.27 psi
F_{bx} :	1596 psi	F_{by} :	1596 psi
M_x :	221979 ft-lb	M_y :	890030 ft-lb
M_{ox} :	764910 ft-lb	M_{oy} :	2649865 ft-lb
I_x :	4577597 in⁴	I_y :	500290 in⁴
A_g :	3780 in²	A_{sm} :	37.80 in²
A_{st} :	37.92 in²	A_s :	10.27 in²
QTY :	48	A_b :	0.79 in²
X Sp'g :	5.11 in	Y Sp'g :	5.60 in
C_{sx} :	29.36 in	C_{sy} :	12.47 in
N qty :	18	R qty :	6
CSR :	0.26	CSM :	0.63

Sliding friction μ : 0.40

Factor of safety against sliding : 4.53



Oct 25 2023

0

BT8 - 11 of 13

Walpar © 2014

Box Truss Double Pole Structure Design

Job No : C3546 Structure No : OH-20 Station : 5418+54.43(EB)

Left Upright Cylindrical Footing Design

Concrete f'_c :	3000 psi	Concrete wgt :	150 pcf
Rebar yield f_y :	60000 psi	Min factor of safety for uplift :	1.00
Reinforcement Clear. :	4 in	Min factor of safety for lateral load :	2.86

Loads and Locations From Structure

Truss DL React (Rd)	4.45 k	Base to Truss Load Dim (H1)	75.13 ft
Upright DL React (Rv)	9.50 k	Base to Upright Load Dim (H2)	38.50 ft
Truss WL React (Rh)	7.20 k	Footing Projection at Ctr (H3)	0.75 ft
Upright WL React (Wv)	4.96 k	C/C of Cylinders (C)	5.75 ft

Normal Overturning Moment (M_{WL})	741.16 ft-k	Effective Hgt (H_{eff})	60.94 ft
Transverse Moment (M_{TL})	148.23 ft-k	Lateral Load (P_{eff})	6.27 k
Resultant Moment (M_R)	755.84 ft-k	Axial Force	10.47 k
Effective Overturning Moment	509.79 ft-k		

Final Cylindrical Footing Design Sizes

Req'd area of steel (A_s)	13.64 in²	Rebar Cage Dia (D1)	37.88 in
1% Cyl Area Min (A_m)	18.10 in²	Vertical bar spacing	6.26 in
Actual Reinf Area (A_p)	19.00 in²		

USE 48 in DIA x 19'- 0 CYLINDER
w/ 19- # 9 VERT. BARS & 20 - #4 HOOPS

Serviceability	Quantities
Calculated lateral safety factor = 13.2	2690 lbs of reinforcement
Calculated uplift safety factor = 8.6	17.69 cyd of concrete

Side Shear Results
(from Beta Method)

Cylinder Embedment	18.25 ft
Axial load	6.98 k
Uplift load	88.66 k
Weight of shaft	35.81 k
Side Resistance Capacity	765.09 k

Lateral Load Calculation Results
(from Brom's Method)

Soil friction angle Φ	37.6°
Soil unit weight γ	116 pcf
Average $(N_1)_{60}$ over eff depth (BPF)	32
Effective lateral load on cylinder	6.27 k
Effective moment on cylinder	382.34 ft-k
Axial thrust from moment and vertical loads	99.12 k
Rankine Passive Pressure Coeff. K_P	5.50
Ultimate soil resistance P_{ult}	406.88 k
Allowable soil resistance P_{max}	189.21 k
Ultimate soil moment capacity M_{ult}	5457 ft-k
Allowable soil moment capacity M_{max}	2538 ft-k
Ground line moment	387 ft-k
Dist. from GL to 0 shear point in cyl.	3.28 ft
Maximum moment in shaft	412 ft-k

SOUTH CAROLINA LICENSED PROFESSIONAL ENGINEER
David A Lallone
No. 38665
DAVID A LALLONE

Oct 25 2023

0

BT8 - 12 of 13

Walpar © 2014

Box Truss Double Pole Structure Design

Job No : C3546 Structure No : OH-20 Station : 5418+54.43(EB)

Right Upright Cylindrical Footing Design

Concrete f '$_c$:	3000 psi	Concrete wgt :	150 pcf
Rebar yield f_y :	60000 psi	Min factor of safety for uplift :	1.00
Reinforcement Clear. :	4 in	Min factor of safety for lateral load :	2.86

Loads and Locations From Structure

Truss DL React (Rd)	4.96 k	Base to Truss Load Dim (H1)	78.60 ft
Upright DL React (Rv)	10.99 k	Base to Upright Load Dim (H2)	40.24 ft
Truss WL React (Rh)	7.71 k	Footing Projection at Ctr (H3)	0.75 ft
Upright WL React (Wv)	5.73 k	C/C of Cylinders (C)	5.75 ft

Normal Overturning Moment (M_{WL})	846.36 ft-k	Effective Hgt (H_{eff})	62.99 ft
Transverse Moment (M_{TL})	169.27 ft-k	Lateral Load (P_{eff})	7.28 k
Resultant Moment (M_R)	863.12 ft-k	Axial Force	11.97 k
Effective Overturning Moment	611.33 ft-k		

Final Cylindrical Footing Design Sizes

Req'd area of steel (A_s)	16.38 in²	Rebar Cage Dia (D1)	37.88 in
1% Cyl Area Min (A_m)	18.10 in²	Vertical bar spacing	6.26 in
Actual Reinf Area (A_p)	19.00 in²		

USE 48 in DIA x 19'- 0 CYLINDER
w/ 19- # 9 VERT. BARS & 20 - #4 HOOPS

Serviceability	Quantities
Calculated lateral safety factor = 8.8	2690 lbs of reinforcement
Calculated uplift safety factor = 6.1	17.69 cyd of concrete

Side Shear Results
(from Beta Method)

Cylinder Embedment	18.25 ft
Axial load	7.98 k
Uplift load	106.32 k
Weight of shaft	35.81 k
Side Resistance Capacity	648.91 k

Lateral Load Calculation Results
(from Brom's Method)

Soil friction angle Φ	38.4°
Soil unit weight γ	105 pcf
Average $(N_1)_{60}$ over eff. depth (BPF)	46
Effective lateral load on cylinder	7.28 k
Effective moment on cylinder	458.49 ft-k
Axial thrust from moment and vertical loads	118.28 k
Rankine Passive Pressure Coeff. K_P	4.85
Ultimate soil resistance P_{ult}	325.53 k
Allowable soil resistance P_{max}	151.38 k
Ultimate soil moment capacity M_{ult}	4366 ft-k
Allowable soil moment capacity M_{max}	2030 ft-k
Ground line moment	464 ft-k
Dist. from GL to 0 shear point in cyl.	3.54 ft
Maximum moment in shaft	495 ft-k



Oct 25 2023

0

BT8 - 13 of 13

Walpar © 2014

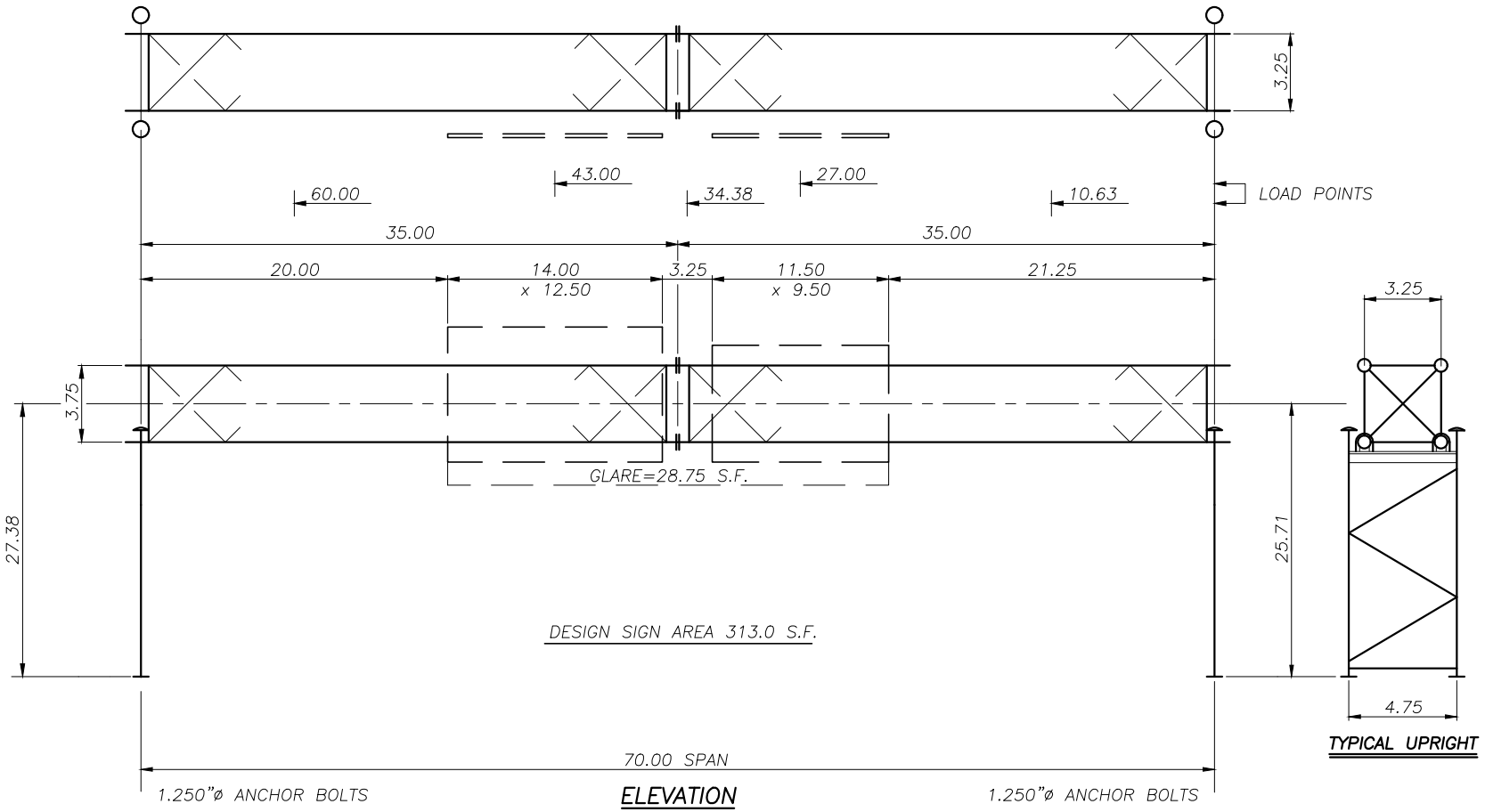

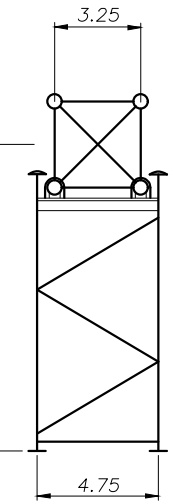

TYPICAL UPRIGHT

ELEVATION

STR NO: OH-22
STA NO: 3027+15.32(WB)

TRUSS:	CHORDS	4.500 x 0.188
	VERT DIAGONALS	1.660 x 0.140
	HORIZ DIAGONALS	1.660 x 0.140
	STRUTS	1.315 x 0.133
	INT DIAGONALS	1.315 x 0.133

UPRIGHTS:	LEFT POSTS	8.625 x 0.188
	STRUTS & DIAGONALS	2.375 x 0.154
	RIGHT POSTS	8.625 x 0.188
	STRUTS & DIAGONALS	2.375 x 0.154

SOUTH CAROLINA
LICENSED PROFESSIONAL ENGINEER
No. 38665
DAVID A LALLONE

Oct 25 2023

Subject Box Truss Design Information Sheet BT9
Job No C3546 By IWL Date 8/24/23
GROUP 2 Chk'd By RRW Date 9/14/23

Box Truss Double Pole Structure Design

Reference Walpar Job Number C3546
Reference Design Information Sheet Number BT9 Structure : OH-22 Station : 3027+15.32(WB)
State SC
AASHTO Specification 6th Edition Fatigue Category : II
Design Wind Velocity (V) 100 mph

Structure Dimensions

Span (S)	70.00 ft	Truss Hgt (U)	3.75 ft	Truss Depth (Y)	3.25 ft
Truss Section Length	35.50 ft			Coeff of Hgt (Kz)	1.00
Left Upright Hgt (H)	27.38 ft	Right Upright Hgt (H)	25.71 ft	Center to center of upright posts (Yu)	4.75 ft

Sign Information **Design Sign Area: 313.00 sq ft**

Sign	Load (i)	Lgth (B_i)	Hgt (D_i)	Location (a_i)	Unit Wgt	Depth	C_d	Front/Back	Z Ecc	Area	Exit Panel
1	2	11.50	10.50	27.00	7.00		1.12	F	5.75	124.0	X
2	4	14.00	13.50	43.00	7.00		1.12	F	5.75	189.0	

11.5' x 9.5'
14' x 12.5'

Walkway Information

	Lgth	Location	Width	Unit wgt	Y Ecc
WW1	36.00	32.00	2.54	55	5.60

Load Summary Estimate for Field Use Only
(Distance from right end of assembled truss)

Weight of truss only	3525 lbs
Weight of erected signs & WW	3581 lbs
Center of erected sign & WW+truss load	35.05 ft
Front to Back Overturning on Truss	14698 ft-lbs
Max upright weight	1499 lbs
Max truss section weight	1770 lbs

SOUTH CAROLINA LICENSED PROFESSIONAL ENGINEER
David A Lallone
No. 38665
DAVID A LALLONE

Oct 25 2023

0

Walpar © 2014

Box Truss Double Pole Structure Design

Job No : C3546 Structure No : OH-22 Station : 3027+15.32(WB)

Loads

Unit wind load on sign(s)/C_d: 29.18 psf Unit wind load on exposed truss: 35.02 psf Unit wgt of truss: 48.95 plf Unit ice wgt on truss: 22.43 plf

Truss Area for Wind Load (A_t): 1.18 sq ft / ft ***All loads in charts in lbs, ft or ft-lbs unless noted**

Truss Load Summary For Actual Sign & WW Condition

	Load (i)	Dead	Wind (W_p & W_h)	Ice
Sign and Truss Loads Ref: (BT9)	1	1040	876	477
	2	1431	4053	630
	3	159	134	73
	4	2008	6192	881
	5	979	824	449
WW Loads	WW1	1980	769	961
Left Reaction (R_L)		3766	6623	1716
Right Reaction (R_R)		3831	6224	1754
Maximum Moments (M)		85094	160500	38800
Point of "0" shear (A_m)		35.92	37.49	35.74

** WW/EQ Loads are incorporated into Sign and Truss Loads to determine Reactions and Moments

Serviceability Requirements

Truss DL + IL Deflection	0.74 in
Limit for Deflection	5.60 in
Camber Used (Cu)	2.00 in
Permanent Camber (Cp)	1.49 in

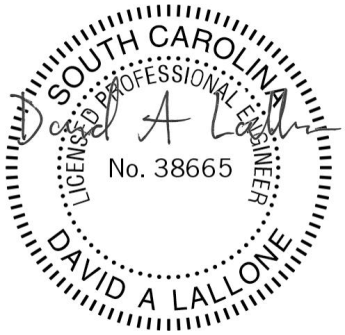

Oct 25 2023

Post Loads

	Dead	Wind	Ice	Group II t_c	Group III t_c	Lateral Stiffness Ratio
Left Upright	1499	714	459	167	250	0.45
Right Upright	1434	616	432	156	234	0.55

0

Walpar © 2014

Box Truss Double Pole Structure Design

Job No : C3546 Structure No : OH-22 Station : 3027+15.32(WB)

Load Combinations for Design Sign Area

Truss Member Loads	DL	DL +WL	DL+1/2 WL+IL
Truss Chords (Pc)	14887	39579	34091
Vertical Diagonals (Pv)	4544	4887	6617
Horizontal Diagonals (Ph)	1717	6949	5024
Vertical Struts (Psv)	3213	2158	3003
Horizontal Struts (Psh)	1124	4551	3290
Truss Moments			
Truss Chords (XMc)	980	4250	2660

Upright Member Loads	Upright Loads					Web Member Loads	
Left Upright	M_N	M_{tc}	V_N	V_{tc}	Axial	Diagonals	Struts
Group II Comb. 1 (DL+WL)	191451	37536	7338	1452	5264	11140	7877
Group III Comb. 1 (DL+1/2WL+IL)	95725	18768	3669	726	7440	5570	3939
Group II Comb. 2 (DL+WL)	114871	56304	4403	2177	5264	7194	5087
Group III Comb. 2 (DL+1/2WL+IL)	57435	28152	2201	1089	7440	3597	2543
Right Upright							
Group II Comb. 1 (DL+WL)	176453	35111	6840	1441	5265	10043	7101
Group III Comb. 1 (DL+1/2WL+IL)	88226	17555	3420	720	7451	5021	3551
Group II Comb. 2 (DL+WL)	105872	52666	4104	2161	5265	6582	4654
Group III Comb. 2 (DL+1/2WL+IL)	52936	26333	2052	1080	7451	3291	2327

Material Information

	Pipe Size (Min Yield)	Unbraced Length	CSR Group II	CSR Group III
Truss Chords	4.500 x 0.188 (52 ksi)	7.50 ft	0.92	0.69
Vertical Diagonals	1.660 x 0.140 (52 ksi)	5.30 ft	0.51	0.70
Vertical Struts	1.315 x 0.133 (52 ksi)	3.75 ft	0.25	0.35
Horizontal Diagonals	1.660 x 0.140 (52 ksi)	4.96 ft	0.64	0.46
Horizontal Struts	1.315 x 0.133 (52 ksi)	3.25 ft	0.42	0.30

	Pipe Size (Min Yield)	Unbraced Length	CSR (Comb. 1) Group II	CSR (Comb. 1) Group III	CSR (Comb. 2) Group II	CSR (Comb. 2) Group III
Left Upright Posts	8.625 x 0.188 (52 ksi)	25.31 ft	0.74	0.38	0.89	0.46
Left Upright Diagonals	2.375 x 0.154 (52 ksi)	5.70 ft	0.44	0.22	0.28	0.14
Left Upright Strut	2.375 x 0.154 (52 ksi)	4.03 ft	0.24	0.12	0.15	0.08
Right Upright Posts	8.625 x 0.188 (52 ksi)	23.65 ft	0.67	0.35	0.82	0.43
Right Upright Diagonals	2.375 x 0.154 (52 ksi)	5.50 ft	0.38	0.19	0.25	0.12
Right Upright Strut	2.375 x 0.154 (52 ksi)	4.03 ft	0.22	0.11	0.14	0.07

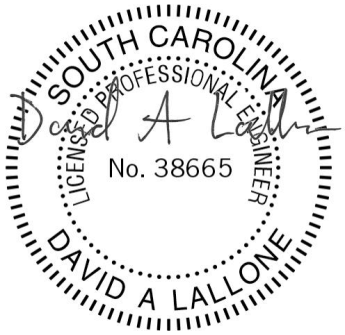

Oct 25 2023

0

BT9 - 3 of 13

Walpar © 2014

Box Truss Double Pole Structure Design

Job No : C3546 Structure No : OH-22 Station : 3027+15.32(WB)

Structure Detail Information

Truss Chord Splices

Maximum Design Load at Splice	65503 lbs
Splice Moment (per inch of circum)	2896 in-lbs
Splice Bolt Circle	7.5 in.
Splice Bolt Qty & Size	4 - ¾" ø A325
Splice Plate Thickness	0.75 in.
Splice Plate Weld	¼ fillet

Upright Detail

	Left	Right
Maximuim Anchor Bolt Pullout	23268 lbs	21465 lbs.
Anchor Bolt Spacing	10.5 in.	10.5 in.
Anchor Bolt Yield	55 ksi	55 ksi
Anchor Bolt Qty & Size (ea pole)	4 - 1.25" ø	4 - 1.25" ø
Anchor Bolt Length (Embed)	4.50 ft (3.5 ft)	4.50 ft (3.5 ft)
Anchor Bolt CSR	0.43	0.37
Base Plate Thickness	1.25 in.	1.25 in.
Base Plate Weld	5/16 fillet	5/16 fillet
Truss Seat	WT6x13	WT6x13
Truss Connection U-Bolts	½" ø	½" ø

Structure Input (For Foundation Designs)

	Left	Right
Truss DL React (Rd)	4.95 k	5.13 k
Upr DL React (Rv)	1.50 k	1.43 k
Truss WL React (Rh)	6.68 k	6.21 k
Upr WL React (Wv)	0.71 k	0.62 k
Distance To Rh (H1)	27.38 ft	25.71 ft
Distance To Wv (H2)	14.63 ft	13.79 ft
Min Ped Lgth (PL)	6.75 ft	6.75 ft
Min Ped Wth (PW)	2.00 ft	2.00 ft

Sign Hanger Detail

Design hanger spacing 9.00 ft

Sign Hanger U-Bolt type ASTM-A307

SIGN	Max UBL at End	Max Spacing	Hanger U-Bolt	Sign Hanger	Hanger Support
1	3.40 ft	9.00 ft	2 - ½" ø	L5x3x5/16	W6x9
2	4.40 ft	9.00 ft	2 - ½" ø	L5x3x5/16	W6x9

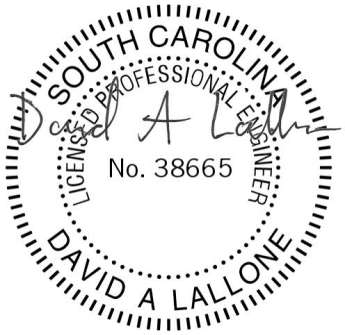

Oct 25 2023

0

BT9 - 4 of 13

Walpar © 2014

Box Truss Double Pole Structure Design

Job No : C3546 Structure No : OH-22 Station : 3027+15.32(WB)

Vibration and Fatigue (Per AASHTO 6th Edition)

Natural Wind Gust Load on Sign(s)/C_d	4.42 psf	Truck Induced Gust Load on Truss	16.63 psf
Natural Wind Gust Load on Truss	5.30 psf	Extent of Truck Induced Gust	12.00 ft
		Truss Area for Truck Induced Gust	1.15 sq ft / ft
		Location of Center of Truck Induced Gust	35.00 ft

Truck Induced Gust Loading

ID	P_{TG} (Uplift)	P_{TG} Torque	Location
Truss Chords	229		35.00
SIGN 1 (PARTIAL)			30.88
Walkway	1265	1889	35.00
Left Reaction	747		
Right Reaction	747		
Maximum Moments	23904		

Truss Load Summary for Natural Wind

LOADS (i)	$P_{NWG(i)}$
1	133
2	614
3	20
4	938
5	125
Left Reaction	1003 lbs
Right Reaction	943 lbs
Maximum Moments	24308 ft-lbs

Load Combinations for Vibration and Fatigue

Truss Members	P_{NWG}	P_{TG}
Truss Chords	3740	3187
Vertical Diagonals		528
Horizontal Diagonals	383	
Vertical Struts		374
Horizontal Struts	251	
Upright Members		
Left Post	5781	374
Right Post	5102	374

Vibration and Fatigue Stresses

	NWG (ksi)	TIG (ksi)	Allowable (ksi)	
Truss Vertical Diagonals		0.79	1.20	
Truss Horizontal Diagonals	0.57		1.20	
Truss Vertical Struts		0.76	1.20	
Truss Horizontal Struts	0.51		1.20	
Truss chord at web members	0.39	1.25	4.50	
Upright Base Connection LT	1.16	0.08	4.50	Socket Connection Base Detail
Upright Base Connection RT	1.02	0.08	4.50	Socket Connection Base Detail
Anchor bolts - LT	1.49		7.00	
Anchor bolts - RT	1.32		7.00	

SOUTH CAROLINA LICENSED PROFESSIONAL ENGINEER
David A Lallone
No. 38665
DAVID A LALLONE

Oct 25 2023

0

BT9 - 5 of 13

Walpar © 2014

Box Truss Double Pole Structure Design

Job No : C3546 Structure No : OH-22 Station : 3027+15.32(WB)

Left Foundation Design

Boring Type	SPT	Boring Designation	G-099		
Major Soil Type	Cohesive	Depth to Water	7.5 ft	Surcharge (Frost) Depth	2 ft
Ground Slope	2:1	Consider slope stability?	Y		

SOIL TYPES	
01-GP	07-SM
02-GW	08-ML
03-GM	09-MH
04-GC	10-SC
05-SP	11-CL
06-SW	12-CH

Soil Properties

Depth	N Value	γ' (pcf)	Φ (deg)	S_u (lbf/ft^2)	α	β	f_{SN} (lbf/ft^2)	$(N_1)_{60}$	Soil Type
**0 - 2.5	11	116	28	1375			257	22	11
2.5 - 1	10	105	33			0.88	1100	20	7
1 - 7.5	20	125		2500	0.55		1100	40	12
7.5 - 8	20	65		2500	0.55		1253	40	12
8 - 12	26	71		3250	0.55		1437	42	12
12 - 35	40	85		4000	0.55		1571	25	12
							1651		

* Soil Type 13 indicates rock layer with N>60 for cohesionless soil or N>40 for cohesive soils

**Top 2.0 ft will not contibute to any load resistance + 1 diameter at bottom will not contribute to frictional load resistance.

Soil Bearing Capacity for Left Spread Footing Design

Footing width, B	8.00 ft	Total wgt of load, foundation and soil, Pt	87.51 k
Footing length, L	15.00 ft	Normal moment, ML	193.34 ft-k
Eccentricity, e_L	2.21 ft	Transverse moment, Mw	40.49 ft-k
Eccentricity, e_B	0.46 ft	Distance from ground to bottom of footing, d_{min}	3.25 ft
Effective ftg width, B'	7.07 ft	Distance from ground to bottom of footing, D_f	5.25 ft
Effective ftg width, L'	10.58 ft	Distance to ground water from bottom of ftg, z_w	4.25 ft
		Overburden pressure at base of footing, q	0.47 ksf
		Weighted average soil unit weight below pad, γ	135 pcf

Ultimate bearing capacity, q_{ult}	21.67 ksf
Allowable Bearing Capacity	7.50 ksf
Bearing Capacity used ***	2.00 ksf

***Note: Bearing capacities greater than 4.0 ksf will rarely effect spread footing pad size

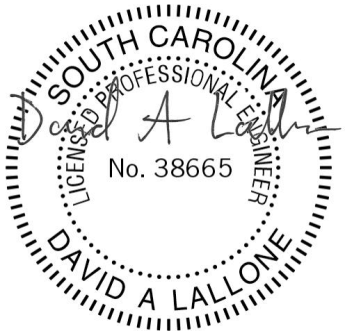

Oct 25 2023

0

BT9 - 6 of 13

Walpar © 2014

Box Truss Double Pole Structure Design

Job No : C3546 Structure No : OH-22 Station : 3027+15.32(WB)

Right Foundation Design

Boring Type SPT Boring Designation G-070
Major Soil Type Cohesionless Depth to Water NA Surcharge (Frost) Depth 2 ft
Ground Slope 2:1 Consider slope stability? Y

SOIL TYPES	
01-GP	07-SM
02-GW	08-ML
03-GM	09-MH
04-GC	10-SC
05-SP	11-CL
06-SW	12-CH

Soil Properties

Depth	N Value	γ' (pcf)	Φ (deg)	S_u (lbf/ft^2)	α	β	f_{SN} (lbf/ft^2)	$(N_1)_{60}$	Soil Type
**0 - 2	14	107	34			1.20	248	28	07
2 - 6	35	140	32	2000	0.55		386	70	11
6 - 8	40	129	40	2000	0.55		2238	80	10
8 - 10	24	112	35			1.10	2343	35	07
10 - 12	19	110	34			1.05	2882	25	07
12 - 13	40	120	36			1.02	3737	47	07
13 - 35	40	120	35			1.01		34	07

* Soil Type 13 indicates rock layer with N>60 for cohesionless soil or N>40 for cohesive soils
**Top 2.0 ft of soil will not contribute to load resistance.

Soil Bearing Capacity for Right Spread Footing Design

Footing width, B 7.00 ft
Footing length, L 15.00 ft
Eccentricity, e_L 2.15 ft
Eccentricity, e_B 0.45 ft
Effective ftg width, B' 6.10 ft
Effective ftg width, L' 10.70 ft

Total wgt of load, foundation and soil, Pt 78.06 k
Normal moment, ML 168.02 ft-k
Transverse moment, Mw 35.07 ft-k
Distance from ground to bottom of footing, d_{min} 3.50 ft
Distance from ground to bottom of footing, D_f 5.25 ft
Distance to ground water from bottom of ftg, z_w N.A.
Overburden pressure at base of footing, q 0.63 ksf
Weighted average soil unit weight below pad, γ 120 pcf

Ultimate bearing capacity, q_{ult} 60.00 ksf
Allowable Bearing Capacity 20.00 ksf
Bearing Capacity used *** 2.00 ksf

***Note: Bearing capacities greater than 4.0 ksf will rarely effect spread footing pad size

SOUTH CAROLINA LICENSED PROFESSIONAL ENGINEER
David A Lallone
No. 38665
DAVID A LALLONE

Oct 25 2023

0

BT9 - 7 of 13

Walpar © 2014

Box Truss Double Pole Structure Design

Job No : C3546 Structure No : OH-22 Station : 3027+15.32(WB)

Left Upright Spread Footing Design

Material/Soil Specifications and Safety Factors

Concrete f'_c :	3000 psi	Concrete wgt :	150 pcf
Rebar yield f_y :	60000 psi	Rebar F_s :	24000 psi
Soil Bearing Capacity :	2000 psf	Soil unit wgt :	110 pcf

Load Safety Factor[1] : 1.15

Loads and Locations From Structure

Truss DL React (Rd)	4.95 k	Base to Truss Load Dim (H1)	27.38 ft
Upright DL React (Rv)	1.50 k	Base to Upright Load Dim (H2)	14.63 ft
Truss WL React (Rh)	6.68 k	Total DL React (DL)	6.45 k
Upright WL React (Wv)	0.71 k	Transverse Wind Component (tc)	1.48 k

Loads at Top of Pedestal from Structure

Axial load (P)	6.45 k		
Moment (ML)	193.34 ft-k	Moment (Mw)	40.49 ft-k
Shear (VL)	7.40 k	Shear (Vw)	1.48 k

Final Spread Footing Design Sizes

Pad Length (L)	15.00 ft	Pedestal Width (PW)	2.00 ft
Pad Width (W)	8.00 ft	Pedestal Length (PL)	6.75 ft
Pad Thickness (T)	1.50 ft	Pedestal Projection at Ctr (PE)	1.25 ft
		Ground line to top of pad (PT)	3.75 ft

Reinforcement

Pad	Pedestal
Top each way - #4 Bars @ 12" o.c.	4 ea. - #8 Vert. Bars @ 5.33" o.c. @ Ends
X Direction - 8 - #5 Bars @ 12.00" o.c.	10 ea. - #8 Vert. Bars @ 6.64" o.c. @ Sides
Y Direction - 15 - #4 Bars @ 12" o.c.	6 - #4 Ties @ 12" max. o.c.

Serviceability	Quantities
6.91% of footing in uplift	951 lbs of reinforcement
Safety factor against overturning = 11.00	9.17 cyd of concrete

Uncracked Section Calculations

Wgt of soil above pad (Ps)	43.93 k		
Wgt of concrete (Pc)	37.13 k	Total Area (A)	120.00 ft²
Total Load (Pt)	87.51 k		
X	7.50 ft	Y	4.00 ft
Ix	640.00 ft⁴	Iy	2250.00 ft⁴
Mx	57.62 k-ft	My	277.62 k-ft

Corner Stresses [Factored[1] (unfactored) loads]	
F1	2.01 ksf (1.85 ksf)
F2	1.29 ksf (1.22 ksf)
F3	-0.56 ksf (-0.39 ksf)
F4	0.16 ksf (0.24 ksf)

Cracked Section Calculations [Factored loads[1] (unfactored loads)]

A1	81.27 ft² (90.97 ft²)	L1	10.16 ft (11.37 ft)	W1	8.00 ft (8.00 ft)
A2	12.05 ft² (12.45 ft²)	L2	4.84 ft (3.63 ft)	W2	2.49 ft (3.43 ft)
A3	13.34 ft² (8.29 ft²)	L3	4.84 ft (3.63 ft)	W3	5.51 ft (4.57 ft)
A'	106.66 ft² (111.71 ft²)				
Xc	0.74 ft (0.47 ft)	X1	2.42 ft (1.81 ft)	Y1	0.00 ft (0.00 ft)
Yc	0.27 ft (0.18 ft)	X2	-5.08 ft (-5.69 ft)	Y2	2.76 ft (2.28 ft)
		X3	-4.27 ft (-5.08 ft)	Y3	-0.33 ft (-0.95 ft)
Ixc	497.30 ft⁴ (555.21 ft⁴)	X'	8.24 ft (7.97 ft)		
Iyc	1762.67 ft⁴ (1912.26 ft⁴)	Y'	4.27 ft (4.18 ft)		
Ixcyc	-181.18 ft⁴ (-134.91 ft⁴)				
Mxc	33.95 ft-k (34.02 ft-k)				
Myc	213.20 ft-k (200.57 ft-k)				

Corner Stresses [Factored[1] (unfactored) loads]	
F1	2.28 ksf (1.97 ksf)
F2	1.35 ksf (1.26 ksf)
F3	-0.64 ksf (-0.40 ksf)
F4	0.29 ksf (0.30 ksf)

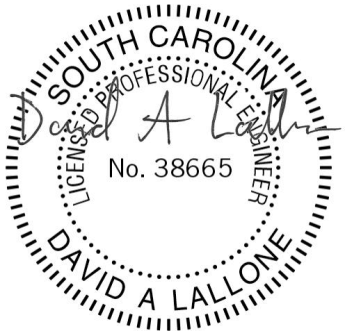

Oct 25 2023

0

BT9 - 8 of 13

Walpar © 2014

Box Truss Double Pole Structure Design

Job No : C3546 Structure No : OH-22 Station : 3027+15.32(WB)

Left Upright Spread Footing Design (cont.)

Moment and Shear Calculation Results

LL	4.13 ft	WW	3.00 ft	S_{y0}	1.82 ksf	S_{x0}	1.29 ksf
L_{x1}	6.38 ft	W_{x1}	0.00 ft	S_{y1}	1.67 ksf	S_{x1}	1.29 ksf
L_{x2}	4.54 ft	W_{x2}	1.83 ft	S_{y2}	1.42 ksf	S_{x2}	1.07 ksf
L_{y1}	1.13 ft	W_{y1}	4.00 ft	S_{y3}	1.27 ksf	S_{x3}	0.94 ksf
L_{y2}	1.83 ft	W_{y2}	2.17 ft	Pcs	0.64 ksf		
				DTS_y	4.67 k/ft	DTS_x	1.20 k/ft
				M_{YY}	8.48 ft-k	M_{XX}	2.40 ft-k

Reinforcement Calculations

f_{cr} : 1596 psi v_{cr} : 69 psi n : 9.29

b : 12.00 in d : 14.00 in x : 5.25 in

About Y Axis		About X Axis	
p :	0.0018	p :	0.0018
k :	0.1669	k :	0.1669
j :	0.9444	j :	0.9444
f_{ca} :	549 psi	f_{ca} :	155 psi
v_{ca} :	29 psi	v_{ca} :	8 psi
Mt :	185911 in-k	Mt :	52560 in-k
ld_r :	19.92 in	ld_r :	21.98 in
ld_a :	46.50 in	ld_a :	33.00 in
ld_{min} :	34.23 in	ld_{min} :	27.39 in
A_{sr} :	0.24 in²	A_{sr} :	0.07 in²
A_s Used :	0.31 in²	A_s Used :	0.20 in²

Tie Size : #4

Pedestal Calculations

V_1 : 7542 lbs V_2 : 0 lbs V_t : 7542 lbs

About Y Axis		About X Axis	
C_x :	40.50 in	C_y :	12.00 in
G_x :	73.00 in	G_y :	16.00 in
f_a :	3.32 psi	f_v :	340.94 psi
F_a :	1596 psi	F_v :	26334 psi
f_{bx} :	16.30 psi	f_{by} :	299.20 psi
F_{bx} :	1596 psi	F_{by} :	1596 psi
M_x :	47884 ft-lb	M_y :	230314 ft-lb
M_{ox} :	268979 ft-lb	M_{oy} :	1227218 ft-lb
I_x :	1427865 in⁴	I_y :	110845 in⁴
A_g :	1944 in²	A_{sm} :	19.44 in²
A_{st} :	22.12 in²	A_s :	6.32 in²
QTY :	28	A_b :	0.79 in²
X Sp'g :	6.64 in	Y Sp'g :	5.33 in
C_{sx} :	22.28 in	C_{sy} :	7.11 in
N qty :	10	R qty :	4
CSR :	0.20	CSM :	0.37

Sliding friction μ : 0.40

Factor of safety against sliding : 3.79

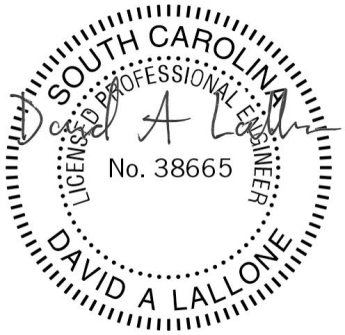

Oct 25 2023

0

Walpar © 2014

Box Truss Double Pole Structure Design

Job No : C3546 Structure No : OH-22 Station : 3027+15.32(WB)

Right Upright Spread Footing Design

Material/Soil Specifications and Safety Factors

Concrete f'_c :	3000 psi	Concrete wgt :	150 pcf
Rebar yield f_y :	60000 psi	Rebar F_s :	24000 psi
Soil Bearing Capacity :	2000 psf	Soil unit wgt :	110 pcf

Load Safety Factor[1] : 1.15

Loads and Locations From Structure

Truss DL React (Rd)	5.13 k	Base to Truss Load Dim (H1)	25.71 ft
Upright DL React (Rv)	1.43 k	Base to Upright Load Dim (H2)	13.79 ft
Truss WL React (Rh)	6.21 k	Total DL React (DL)	6.56 k
Upright WL React (Wv)	0.62 k	Transverse Wind Component (tc)	1.36 k

Loads at Top of Pedestal from Structure

Axial load (P)	6.56 k		
Moment (ML)	168.02 ft-k	Moment (Mw)	35.07 ft-k
Shear (VL)	6.82 k	Shear (Vw)	1.36 k

Final Spread Footing Design Sizes

Pad Length (L)	15.00 ft	Pedestal Width (PW)	2.00 ft
Pad Width (W)	7.00 ft	Pedestal Length (PL)	6.75 ft
Pad Thickness (T)	1.50 ft	Pedestal Projection at Ctr (PE)	1.25 ft
		Ground line to top of pad (PT)	3.75 ft

Reinforcement

Pad	Pedestal
Top each way - #4 Bars @ 12" o.c.	4 ea. - #8 Vert. Bars @ 5.33" o.c. @ Ends
X Direction - 7 - #5 Bars @ 12.00" o.c.	10 ea. - #8 Vert. Bars @ 6.64" o.c. @ Sides
Y Direction - 15 - #4 Bars @ 12" o.c.	6 - #4 Ties @ 12" max. o.c.

Serviceability	Quantities
7.40% of footing in uplift	906 lbs of reinforcement
Safety factor against overturning = 29.14	8.33 cyd of concrete

Uncracked Section Calculations

Wgt of soil above pad (Ps)	33.75 k		
Wgt of concrete (Pc)	37.74 k	Total Area (A)	105.00 ft²
Total Load (Pt)	78.06 k		
X	7.50 ft	Y	3.50 ft
Ix	428.75 ft⁴	Iy	1968.75 ft⁴
Mx	50.53 k-ft	My	244.20 k-ft

Corner Stresses [Factored[1] (unfactored) loads]	
F1	2.09 ksf (1.91 ksf)
F2	1.26 ksf (1.19 ksf)
F3	-0.60 ksf (-0.42 ksf)
F4	0.23 ksf (0.29 ksf)

Cracked Section Calculations [Factored loads[1] (unfactored loads)]

A1	66.98 ft² (76.75 ft²)	L1	9.57 ft (10.96 ft)	W1	7.00 ft (7.00 ft)
A2	13.16 ft² (12.75 ft²)	L2	5.43 ft (4.04 ft)	W2	2.42 ft (3.16 ft)
A3	12.43 ft² (7.75 ft²)	L3	5.43 ft (4.04 ft)	W3	4.58 ft (3.84 ft)
A'	92.57 ft² (97.25 ft²)				
Xc	0.76 ft (0.49 ft)	X1	2.72 ft (2.02 ft)	Y1	0.00 ft (0.00 ft)
Yc	0.27 ft (0.18 ft)	X2	-4.78 ft (-5.48 ft)	Y2	2.29 ft (1.92 ft)
		X3	-3.88 ft (-4.81 ft)	Y3	-0.45 ft (-0.94 ft)
Ixc	311.82 ft⁴ (360.79 ft⁴)	X'	8.26 ft (7.99 ft)		
Iyc	1539.55 ft⁴ (1664.99 ft⁴)	Y'	3.77 ft (3.68 ft)		
Ixcyc	-149.78 ft⁴ (-111.01 ft⁴)				
Mxc	29.84 ft-k (30.13 ft-k)				
Myc	184.58 ft-k (174.05 ft-k)				

Corner Stresses [Factored[1] (unfactored) loads]	
F1	2.42 ksf (2.06 ksf)
F2	1.30 ksf (1.23 ksf)
F3	-0.74 ksf (-0.45 ksf)
F4	0.39 ksf (0.37 ksf)

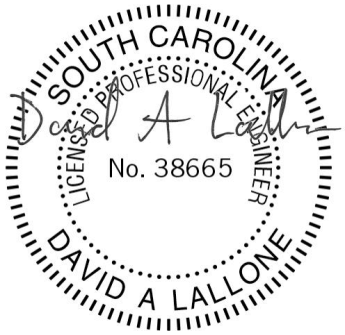

Oct 25 2023

0

BT9 - 10 of 13

Walpar © 2014

Box Truss Double Pole Structure Design

Job No : C3546 Structure No : OH-22 Station : 3027+15.32(WB)

Right Upright Spread Footing Design (cont.)

Moment and Shear Calculation Results

LL	4.13 ft	WW	2.50 ft	S_{y0}	1.86 ksf	S_{x0}	1.41 ksf
L_{x1}	5.88 ft	W_{x1}	0.00 ft	S_{y1}	1.64 ksf	S_{x1}	1.41 ksf
L_{x2}	4.54 ft	W_{x2}	1.33 ft	S_{y2}	1.46 ksf	S_{x2}	1.19 ksf
L_{y1}	1.63 ft	W_{y1}	3.50 ft	S_{y3}	1.30 ksf	S_{x3}	1.00 ksf
L_{y2}	1.33 ft	W_{y2}	2.17 ft	Pcs	0.64 ksf		
			0.00 ft	DTS_y	4.51 k/ft	DTS_x	1.01 k/ft
			0.00 ft	M_{YY}	8.81 ft-k	M_{XX}	1.98 ft-k

Reinforcement Calculations

f_{cr} : 1596 psi v_{cr} : 69 psi n : 9.29

b : 12.00 in d : 14.00 in x : 5.25 in

About Y Axis		About X Axis	
p :	0.0018	p :	0.0018
k :	0.1669	k :	0.1669
j :	0.9444	j :	0.9444
f_{ca} :	571 psi	f_{ca} :	128 psi
v_{ca} :	28 psi	v_{ca} :	6 psi
Mt :	193104 in-k	Mt :	43445 in-k
ld_r :	21.42 in	ld_r :	21.48 in
ld_a :	46.50 in	ld_a :	27.00 in
ld_{min} :	34.23 in	ld_{min} :	27.39 in
A_{sr} :	0.25 in²	A_{sr} :	0.06 in²
A_s Used :	0.31 in²	A_s Used :	0.20 in²

Tie Size : #4

Pedestal Calculations

V_1 : 6956 lbs V_2 : 0 lbs V_t : 6956 lbs

About Y Axis		About X Axis	
C_x :	40.50 in	C_y :	12.00 in
G_x :	73.00 in	G_y :	16.00 in
f_a :	3.38 psi	f_v :	314.46 psi
F_a :	1596 psi	F_v :	26334 psi
f_{bx} :	14.26 psi	f_{by} :	262.57 psi
F_{bx} :	1596 psi	F_{by} :	1596 psi
M_x :	41891 ft-lb	M_y :	202119 ft-lb
M_{ox} :	268979 ft-lb	M_{oy} :	1227218 ft-lb
I_x :	1427865 in⁴	I_y :	110845 in⁴
A_g :	1944 in²	A_{sm} :	19.44 in²
A_{st} :	22.12 in²	A_s :	6.32 in²
QTY :	28	A_b :	0.79 in²
X Sp'g :	6.64 in	Y Sp'g :	5.33 in
C_{sx} :	22.28 in	C_{sy} :	7.11 in
N qty :	10	R qty :	4
CSR :	0.18	CSM :	0.32

Sliding friction μ : 0.40

Factor of safety against sliding : 3.66

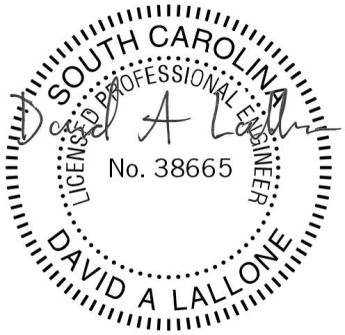

Oct 25 2023

0

Walpar © 2014

Box Truss Double Pole Structure Design

Job No : C3546 Structure No : OH-22 Station : 3027+15.32(WB)

Left Upright Cylindrical Footing Design

Concrete f'_c :	3000 psi	Concrete wgt :	150 pcf
Rebar yield f_y :	60000 psi	Min factor of safety for uplift :	1.00
Reinforcement Clear. :	3 in	Min factor of safety for lateral load :	2.86

Loads and Locations From Structure

Truss DL React (Rd)	4.95 k	Base to Truss Load Dim (H1)	27.38 ft
Upright DL React (Rv)	1.50 k	Base to Upright Load Dim (H2)	14.63 ft
Truss WL React (Rh)	6.68 k	Footing Projection at Ctr (H3)	1.25 ft
Upright WL React (Wv)	0.71 k	C/C of Cylinders (C)	4.75 ft

Normal Overturning Moment (M_{WL})	202.58 ft-k	Effective Hgt (H_{eff})	27.39 ft
Transverse Moment (M_{TL})	40.52 ft-k	Lateral Load (P_{eff})	3.61 k
Resultant Moment (M_R)	206.59 ft-k	Axial Force	4.84 k
Effective Overturning Moment	131.81 ft-k		

Final Cylindrical Footing Design Sizes

Req'd area of steel (A_s)	6.82 in²	Rebar Cage Dia (D1)	22.00 in
1% Cyl Area Min (A_m)	7.07 in²	Vertical bar spacing	7.68 in
Actual Reinf Area (A_p)	7.11 in²		

USE 30 in DIA x 17'- 0 CYLINDER
w/ 9- # 8 VERT. BARS & 18 - #4 HOOPS

Serviceability	Quantities
Calculated lateral safety factor = 8.5	962 lbs of reinforcement
Calculated uplift safety factor = 5.5	6.18 cyd of concrete

Side Shear Results
(from Alpha Method)

Cylinder Embedment	15.75 ft
Axial load	3.23 k
Uplift load	27.75 k
Weight of shaft	12.52 k
Side Resistance Capacity	153.35 k

Lateral Load Calculation Results
(from Brom's Method)

Soil friction angle Φ	5.6°
Soil unit weight γ	92 pcf
Average $(N_1)_{60}$ over eff depth (BPF)	38
Effective lateral load on cylinder	3.61 k
Effective moment on cylinder	98.86 ft-k
Axial thrust from moment and vertical loads	32.59 k
Rankine Passive Pressure Coeff. K_P	6.16
Ultimate soil resistance P_{ult}	701.71 k
Allowable soil resistance P_{max}	326.32 k
Ultimate soil moment capacity M_{ult}	1012 ft-k
Allowable soil moment capacity M_{max}	471 ft-k
Ground line moment	103 ft-k
Dist. from GL to 0 shear point in cyl.	3.30 ft
Maximum moment in shaft	120 ft-k

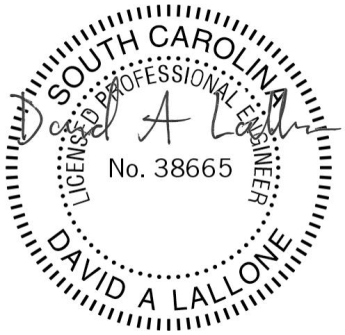

Oct 25 2023

0

BT9 - 12 of 13

Walpar © 2014

Box Truss Double Pole Structure Design

Job No : C3546 Structure No : OH-22 Station : 3027+15.32(WB)

Right Upright Cylindrical Footing Design

Concrete f '$_c$:	3000 psi	Concrete wgt :	150 pcf
Rebar yield f_y :	60000 psi	Min factor of safety for uplift :	1.00
Reinforcement Clear. :	3 in	Min factor of safety for lateral load :	2.86

Loads and Locations From Structure

Truss DL React (Rd)	5.13 k	Base to Truss Load Dim (H1)	25.71 ft
Upright DL React (Rv)	1.43 k	Base to Upright Load Dim (H2)	13.79 ft
Truss WL React (Rh)	6.21 k	Footing Projection at Ctr (H3)	1.25 ft
Upright WL React (Wv)	0.62 k	C/C of Cylinders (C)	4.75 ft

Normal Overturning Moment (M_{WL})	176.54 ft-k	Effective Hgt (H_{eff})	25.88 ft
Transverse Moment (M_{TL})	35.31 ft-k	Lateral Load (P_{eff})	3.25 k
Resultant Moment (M_R)	180.04 ft-k	Axial Force	4.92 k
Effective Overturning Moment	111.99 ft-k		

Final Cylindrical Footing Design Sizes

Req'd area of steel (A_s)	5.89 in²	Rebar Cage Dia (D1)	22.00 in
1% Cyl Area Min (A_m)	7.07 in²	Vertical bar spacing	7.68 in
Actual Reinf Area (A_p)	7.11 in²		

USE 30 in DIA x 15'- 0 CYLINDER
w/ 9- # 8 VERT. BARS & 16 - #4 HOOPS

Serviceability	Quantities
Calculated lateral safety factor = 7.6	847 lbs of reinforcement
Calculated uplift safety factor = 4.9	5.45 cyd of concrete

Side Shear Results
(from Beta Method)

Cylinder Embedment	13.75 ft
Axial load	3.28 k
Uplift load	23.58 k
Weight of shaft	11.04 k
Side Resistance Capacity	116.16 k

Lateral Load Calculation Results
(from Brom's Method)

Soil friction angle Φ	35.3°
Soil unit weight γ	120 pcf
Average $(N_1)_{60}$ over eff. depth (BPF)	50
Effective lateral load on cylinder	3.25 k
Effective moment on cylinder	83.99 ft-k
Axial thrust from moment and vertical loads	28.50 k
Rankine Passive Pressure Coeff. K_P	3.25
Ultimate soil resistance P_{ult}	84.20 k
Allowable soil resistance P_{max}	39.16 k
Ultimate soil moment capacity M_{ult}	788 ft-k
Allowable soil moment capacity M_{max}	367 ft-k
Ground line moment	88 ft-k
Dist. from GL to 0 shear point in cyl.	3.49 ft
Maximum moment in shaft	103 ft-k

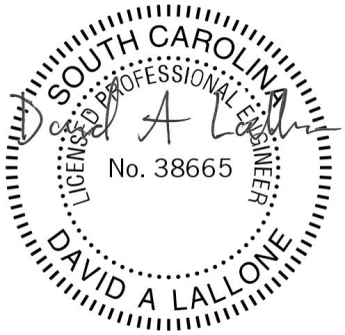

Oct 25 2023

0

BT9 - 13 of 13

Walpar © 2014